Journal of Engineering Sciences
Vol 10, Issue 10, Oct /2019
ISSN NO:0377-9254

VEHICLE THEFT DETECTION SYSTEM BASED ON NORDIC RADIO FREQUENCY

[1]Kurakula Anudeep, [2]Dr. G. Satish Babu
[1]PG Scholar, MTech, Dept of Mechatronics, JNTUHCEH, Hyderabad, T.S.
kurakulaanudeep@gmail.com
[2]Professor, Dept of Mechatronics, JNTUHCEH, Hyderabad, T.S.
satishbabug.jntuhm@gmail.com

ABSTRACT— Recently vehicle tracking system is getting vast popularity because of the rising number of the stolen vehicles. Vehicle theft is happening on parking and sometimes driving in unsecured places. This research work explores how to avoid this kind of stealing and provides more security to the vehicles. The implemented system contains single-board embedded system which is equipped with global system for mobile (GSM) and global positioning system (GPS) along with a microcontroller installed in the vehicle. The use of GSM and GPS technologies allows the system to track the object and provides the most up-to date information about on-going trips. Moreover, fingerprint verification is done in the implemented system to ensure the driving of correct person. The implemented system is very simple with greater security for vehicle anti-theft protection and low-cost technique compared to others.
Keywords— GMS; GPS; fingerprint; embedded system; vehicle anti-theft protection.

I. INTRODUCTION

A vehicle tracking system combines the installation of an electronic device in a vehicle or fleet of vehicle to enable the owner or third party to track the vehicle's location and collecting data in the process. Modern Vehicle Tracking system (VTS) is the technology used to determine the location of a vehicle using different methods like GSM and GPS module and other radio navigation systems operating through satellites and ground-based stations. GSM and GPS based vehicle location and tracking system provides effective, real time mapping based vehicle location tracking. The system uses geographic position and time information from the Global Positioning Satellites. After emerging of GPS system developed by The United States government, first it was only for military purpose.

II. RELATED WORKS

In this research work, a system has been developed based on microcontroller that consists of a GPS and GSM. A two-way communication process is achieved using a GSM modem. This study also comprises of a bio-metric protection system of the vehicle and fingerprint verification of the driver of the vehicle is used to protect the vehicle from anti-theft. Fingerprint recognition or fingerprint authentication can be defined as a method of verifying a match between two human fingerprints in an automated behavior. Fingerprints are one of many forms of biometrics used to identify individuals and verify their identity. It is known that every person has a unique fingerprint
image. When driver gives his verified fingerprint image before starting the vehicle, the system will be considered as fair condition. But when vehicle's location is changed without fingerprint verification, the system will be taken as abnormal condition. Then the system will send an SMS to owner of the vehicle

with an URL of 'GOOGLE MAP' having the coordinate of the current location of the vehicle. SMS will be then sent to the owner having updated location's co-ordinate

Every interval of 10 seconds until doing the proper fingerprint verification. Moreover, vehicle's owner can get the vehicle's location at any time by SMS after making a 'missed call'.

III. SYSTEM DESCRIPTION

In the proposed system anti-theft tracking system is developed. In which the antitheft control management include. To make the proposed system to work, each and every vehicle going for registration is provided with a RFID tag. The details of each vehicle is stored in the database. The NRF is used to create a local network among the traffic sections in which any one of the traffic section detects the stolen vehicle that data is passed to the other traffic section which is connected to the IOT module. The Arduino UNO controller is used to interface the NRF, RFID and IOT modules.

Whenever the vehicle passed through the signal reader get the vehicle type and gives it to the controller unit. In which if any stolen vehicle is found in traffic signal section controller send update of the vehicle information to IOT. So, whenever a vehicle is passed through the traffic signal, the Control unit picks up the tag details and sent to the Transport office via IOT unit. From the obtained value the PC in the Transport office check with the database. If any theft vehicle is found, the control unit in the Transport office will send to Police station about the vehicle passing

through the particular signal. Thus, the police able to intercept the vehicle in the next possible path.

VEHICLE UNIT:

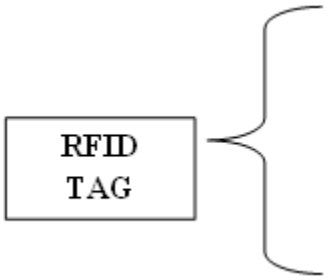

Vehicle's unique Registration number

TRAFFIC SIGNAL SECTION 1:

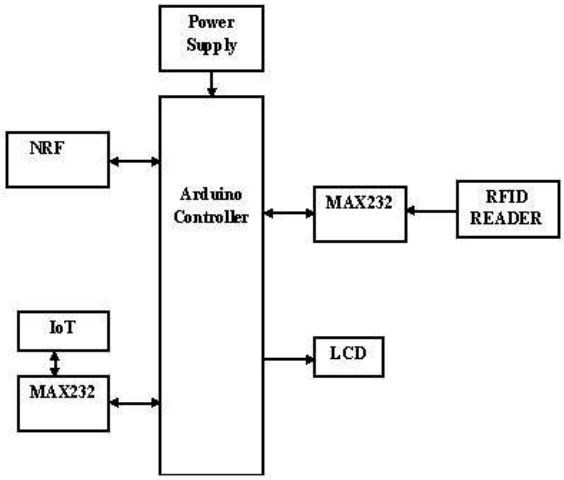

TRAFFIC SIGNAL SECTION 2:

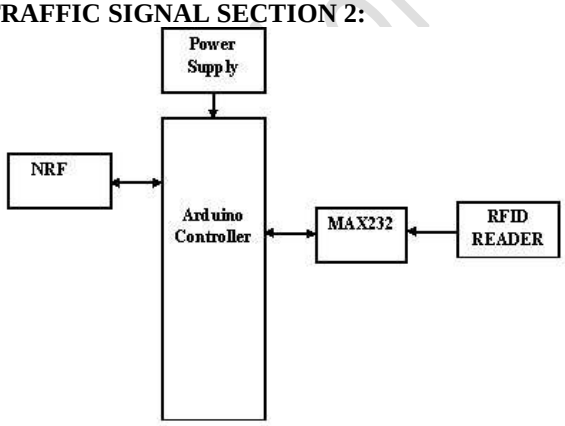

1. POWER SUPPLY

The ac voltage, typically 220V, is connected to a transformer, which steps down that ac voltage down to the level of the desired dc output. A diode rectifier then provides a full-wave rectified voltage that is initially filtered by a simple capacitor filter to produce a dc voltage. This resulting dc voltage usually has some ripple or ac voltage variation.

A regulator circuit removes the ripples and also retains the same dc value even if the input dc voltage varies, or the load connected to the output dc voltage changes. This voltage regulation is usually obtained using one of the popular voltage regulator IC units.

2. PIC 16F877A Microcontroller

Arduino/genuino uno is a microcontroller board based on the atmega328p (datasheet). It has 14 digital input/output pins (of which 6 can be used as pwm outputs), 6 analog inputs, a 16 MHz quartz crystal, a usb connection, a power jack, an icsp header and a reset button. It contains everything needed to support the microcontroller; simply connect it to a computer with a usb cable or power it with a ac-to-dc adapter or battery to get started. You can tinker with your uno without worrying too much about doing something wrong, worst case scenario you can replace the chip for a few dollars and start over again.

"Uno" means one in italian and was chosen to mark the release of arduino software (ide) 1.0. The uno board and version 1.0 of arduino software (ide) were the reference versions of arduino, now evolved to newer releases. The uno board is the first in a series of usb arduino boards, and the reference model for the arduino platform; for an extensive list of current, past or outdated boards see the arduino index of boards.

.

LIQUID CRYSTAL DISPLAY (LCD)

LCD (Liquid Crystal Display) screen is an electronic display module and find a wide range of applications. A 16x2 LCD display is very basic module and is very commonly used in various devices and circuits. These modules are preferred over seven segments and other multi segment LEDs. The reasons being: LCDs are economical; easily programmable; have no limitation of displaying special & even custom characters (unlike in seven segments), animations and so on.

A **16x2 LCD** means it can display 16 characters per line and there are 2 such lines. In this LCD each character is

RS232 line type and logic level	RS232 voltage	TTL voltage to/from MAX232
Data transmission (Rx/Tx) logic 0	+3 V to +25 V	0 V
Data transmission (Rx/Tx) logic 1	-3 V to -25 V	5 V
Control signals (RTS/CTS/DTR/DSR) logic 0	-3 V to -15 V	5 V
Control signals kjnic 1	+3 V to +15 V	0 V

displayed in 5x7 pixel matrix. This LCD has two registers, namely, Command and Data.

The command register stores the command instructions given to the LCD. A command is an instruction given to LCD to do a predefined task like initializing it, clearing its screen, setting the cursor position, controlling display etc. The data register stores the data to be displayed on the LCD. The data is the ASCII value of the character to be displayed on the LCD.

RADIO FREQUENCY IDENTIFICATION

RFID, short for Radio Frequency Identification, is a technology that enables identification of a tag (that is normally attached with an entity) by using electromagnetic waves. RFID Reader Module, are also called as interrogators. They convert radio waves returned from the RFID tag into a form that can be passed on to Controllers, which can make use of it. RFID tags and readers have to be tuned to the same frequency in order to communicate. RFID systems use many different frequencies, but the most common and widely used & supported by our Reader is 125 KHz.

Features:

- Reading Distance: 6-10 cm
- Dimension: 40mmx20mmx8mm (LxHxW)
- Frequency:125kHz
- Compatible Card codes: Manchester64-bit, modules64
- Current Rating: 35mA (Max)
- Operating Voltage:4.6V - 5.4VDC

MAX232

The MAX232 is an IC, first created by Maxim Integrated Products, that converts signals from an RS-232 serial port to signals suitable for use in TTL compatible digital logic circuits. The MAX232 is a dual driver/receiver and typically converts the RX, TX, CTS and RTS signals.

The drivers provide RS-232 voltage level outputs (approx. ± 7.5 V) from a single + 5 V supply via on-chip charge pumps and external capacitors. This makes it useful for implementing RS-232 in devices that otherwise do not need any voltages outside the 0 V to + 5 V range, as power supply design does not need to be made more complicated just for driving the RS-232 in this case.

NRF-NFC Module

NRF24L01 is a single chip radio transceiver for the worldwide 2.4 - 2.5 GHz ISM band. The transceiver consists of a fully integrated frequency synthesizer, a power amplifier, a crystal oscillator, a demodulator, modulator and Enhanced ShockBurst™ protocol engine. Output power, frequency channels, and protocol setup are easily programmable through a SPI interface. Current consumption is very low, only 9.0mA at an output power of -6dBm and 12.3mA in RX mode. Built-in Power Down and Standby modes makes power saving easily realizable.

FEATURES

- Single chip 2.4 GHz Transceiver
- Complete OSI Link Layer in hardware
- Enhanced ShockBurst™
- Auto ACK & retransmit
- Address and CRC computation
- On the air data rate 1 or 2Mbps
- Digital interface (SPI) speed 0-8 Mbps
- 125 RF channel operation
- Short switching time enable frequency hopping
- Fully RF compatible with nRF24XX
- 5V tolerant signal input pads
- 20-pin package (QFN20 4x4mm)
- Uses ultra-low cost +/- 60 ppm crystal
- Uses low cost chip inductors and 2-layer PCB
- Power supply range: 1.9 to 3.6 V
- True single chip GFSK transceiver

ESP8266 WIFI IOT MODULE

- These modules include 1MB (8Mbit) of flash memory, twice the size of the older blue colored ESP-01 module
- The ESP8266 Serial/UART to WiFi module is a great way to connect your Arduino or other microcontroller projects to a WiFi network
- Create your next internet of things (IOT) project with affordable network connectivity by implementing this module into your design

- The module has the ability to run independent of a host controller
- The eight-pin header includes two GPIO pins that allow for direct connection of the module to sensors, peripherals, or host controller
- The ESP8266 has 3.6V tolerant I/O's so you will need a logic level converter to connect it with higher voltage devices such as Arduino
- The ESP8266 requires 3.3V power so you may need a 3.3V voltage regulator to provide the correct voltage, depending on your setup

V. EXPERIMENT RESULT

After assembling the complete system, the reading of the different RFID cards has been checked. I have tested the system response in different situations with IOT ESP8266 connection. The GSM is useful for authentication and current status of the place are displayed in fig.

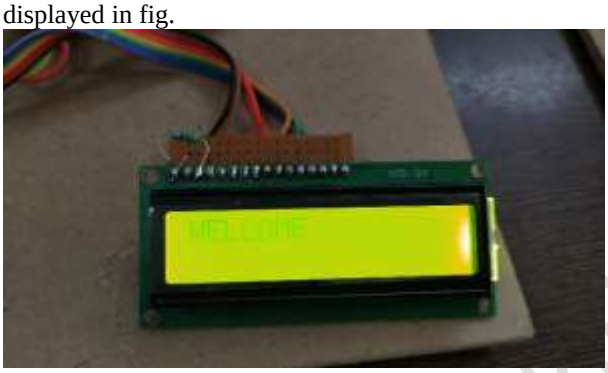

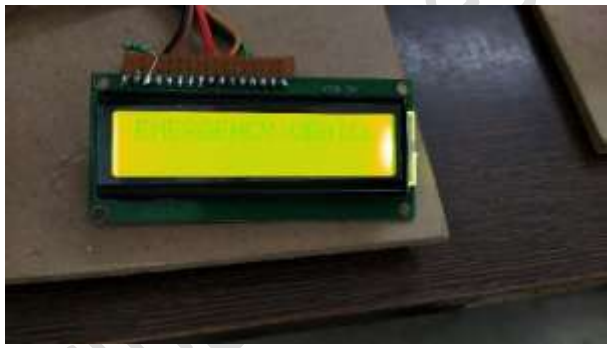

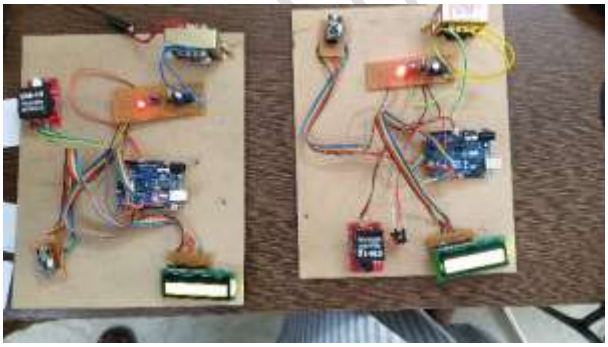

VI. CONCLUSION

In this research work, vehicle location can be tracked and prevention of it from theft with minimum cost in quasi real-time mode IOT technology is very effective security check technology and also in lower cost to avoid stealing of vehicles. In future, smartphone (i.e. android, windows) application can be made and interfacing a dedicated smart-phone installed in vehicle with face recognition device can be done to get real-time vehicle tracking with inter-active mapping.

VII. REFERENCES

[1] M.F. Saaid, M.A. Kamaludin, M.S.A. Megat Ali, “Vehicle Location Finder Using Global Position System and Global System for Mobile,” in ICSGRC’14,2014, p. 279-284.

[2] Mohammad A. Al-Khedher, “Hybrid GPS-GSM Localization of Automobile Tracking System,” International Journal of Computer Science & Information Technology (IJCSIT), Vol. 3, No 6, pp. 75-85, Dec. 2011.

[3] Committee on the Future of the Global Positioning System; National Academy of Public Administration (1995). The global positioning system: a shared national asset: recommendations for technical improvements and enhancements. National Academies, National Research Council, U.S.A., 2013.

[4] (2015) Official U.S. Government website about the Global Positioning System (GPS) and related topics. [Online]. Available: http://www.gps.gov/

[5] O. Al-Bayari, B. Sadoun, “New centralized automatic vehicle location communications software system under GIS environment”, IJCS, vol. 18, Issue 9, pp. 833–846,April 2005.

[6] A.T. Hapsari, E.Y. Syamsudin, and I. Pramana, “Design of Vehicle Position Tracking System Using Short Message Services and Its Implementation on FPGA” in PCASPDA’05,2005, p.56-61.

[7] X. Fan, W. Xu, H. Chen, and L. Liu, “CCSMOMS: A Composite Communication Scheme for Mobile Object Management System”, inAINA’06, 2006, Volume 2, Issue 18-20, p. 235–239.

[8] Hsiao, W.C.M., and S.K.J. Chang, “The Optimal Location Update Strategy of Cellular Network Based Traffic Information System”, in ITSC’06, 2006, p. 248-254.

[9] Tamil, E.M., D.B. Saleh, and M.Y.I. Idris, “A Mobile Vehicle Tracking System with GPS/GSM Technology”, in SCORED’07, 2007.

[10] Pati, N., “Occlusion Tolerant Object Recognition Methods for Video Surveillance and Tracking of Moving Civilian Vehicles”, M. Eng. Thesis, University of North Texas, Denton, USA, Dec. 2007.

[11] Edward E. Hueske. Firearms and Fingerprints, Facts on File/Infobase Publishing, New York. 2009. ISBN 978-0-8160-5512-8

[12] (2002) The GOOGLE MAP website. [Online]. Available: http://maps.google.com

[13] Bancroft, S. “An algebraic solution of the GPS equations,” IEEE Transactions on Aerospace and Electronic Systems, vol. 21, pp. 56–57, Jan. 1985.

[14] Abel, J.S. and Chaffee, J.W., "Existence and uniqueness of GPS solutions", IEEE Transactions on

Aerospace and Electronic Systems, vol. 26, pp. 952-956, Sep. 1991.
[15] (2015) The NMEA website. [Online]. Available: http://www.nmea.org/
[16] Glen Van Brummelen, Heavenly Mathematics, The Forgotten Art of Spherical Trigonometry,2nd ed., Princeton University Press, USA, 2013.
[17] (2015) The SIMCOM website.
[18] "GT-511C1R_V1.5 data sheet," ADH Technology Co. Ltd, Taipei, Taiwan.
[19] (2015) The Arduino website.
[20] "SIM908_Hardware_Design data sheet_V1.01," SIM Com, Shanghai, China.