Journal of Engineering Sciences
Vol 10, Issue 10, Oct-2019
ISSN NO:0377-9254

USAGE OF VR IN REAL LIFE GAMING ENVIRONMENT

S. JITHIN[1] Dr. SHANMUGAPRIYA[2]

[1]MCA Student, Department of Computer Application (PG), Dr.SNS Rajalakshmi College of Arts and Science, Coimbatore-641049.

[2]Head of the Department, Department of Computer Application (PG), Dr.SNS Rajalakshmi College of Arts and Science, Coimbatore-641049.

ABSTRACT:

The basis of this research is concerned with crafty and implementing a system that allows a player to engage in a virtual reality (VR) game with better immersion. The trend towards simulated reality for mass market has existed already in the past decades, but has fallen into oblivion. Nevertheless, 2016 marks the year a number of Virtual Reality consumer headsets are being launched, as past technological limitations seem to be committed. the researchers use Unity game engine to develop an Android mobile game to boost learning in driving classroom instruction. we introduce a VR game where participants can use their 21`body signals as a Natural User Interface (NUI)

Keywords:

Virtual reality, immersion, commercial systems, trend analysis, video games, game-based learning, simulator.

I. INTRODUCTION:

The 'buzz' around Virtual Reality during 2016 has been exceptional. The year when a number of virtual reality head. VR environments are immersive worlds that allow participants to experience places that exist nowhere else, to use physics otherwise impossible in the real world, and To move their body and control their movements in innovative ways. Sets are Being released to customer's market has been labelled as the 'year of VR'. Yet, this is not the first time this has happened. In November 1992, leading magazine Computer Gaming World predicted 'Affordable VR by 1994'. If one looks at Google Books Ngram viewer data in Figure 1, it would seem that the year of VR was already 1998. The planned research focuses in designing the technologies that acquire a motion capture that is used to enable the deformation of the player's self-avatar in a real-time game application.

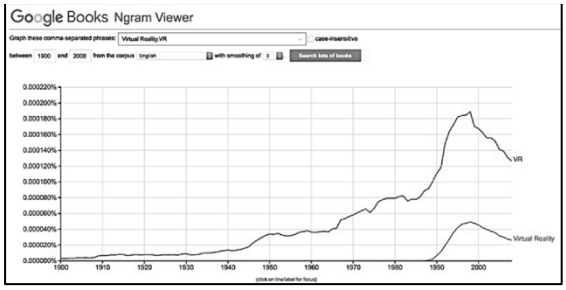

Fig 1: How VR and Virtual Reality have occurred as phrases in a corpus of

English language books between 1900 and 2008.

II. BACKGROUND FOR SIMULATION:

According to the report, the author (Cummins, 2016) says, "Due to the huge evolution in the computer processing power, marches in checking genuine immersive, interactive virtual environments in real time have in the main been evolved". Game trade is presently, besides personal computers, smartphones and video game consoles, embracing VR – it is a development trend which a number of game studios have seen as tactically valid path to pursue.

Various types of NUI have been developed and implemented for navigating VR environments in research prototypes. Recently, LaViola et al explored however individuals may use wearable shoes to navigate Associate in Nursing immersive VR surroundings, whereas Tollmar et al.'s analysis analysed the house of sensory activity interface abstractions for full-body navigation in a screen specifically through pointing gestures.

VR Game and Simulator:

In addition to the mobile game, VR version and simulator version also has been developed. VR version has been integrated with Samsung Gear VR and Oculus SDK. Player uses Samsung Gear VR controller to accelerate and brake in the game scene. VR version has the same sublevels with the examination level in the mobile version.

Therefor in this research, instead of using the game prototype as a means or apparatus to study further research matter, such as embodiment or immersion in VR, we focused on players' direction-finding experience from first to last their body gesture on the subject of the ease of use of the VR system.

Among the tools backup immersive VR attitude there are the Cave Automatic Virtual Environments (CAVE), where the user is in a room where all the walls, as well as the floor, are forecast screens (or flat displays). The user, who can wear 3D glasses, feels moving in the proposed world where he can move around freely.

III. PROPOSED DESIGN:

The Architecture uses cameras for depth-based and vision-based techniques.

- (HMDU) Head Mount Display Unit
- (HFU) Haptic Feedback Unit
- Middle VR and VRPN
- MCU) Motion Capture Unit and Network:

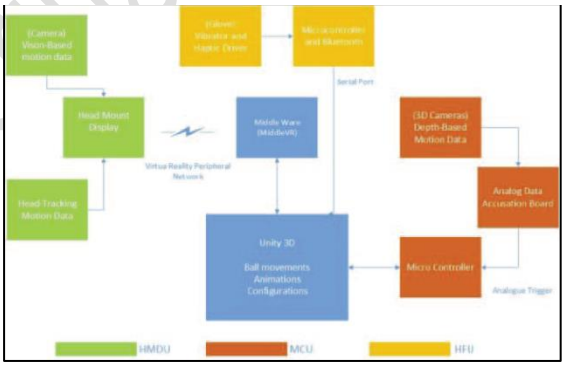

(HMDU) Head Mount Display Unit:

A HMD is a show manoeuvre, tattered on the head or as part of a helmet (See Helmet-mounted display for aeronautics applications), that has a small display optic in front of one or each eye. A HMD has many uses, with in gaming, flight, production, and medicine lift. [1] A head-

mounted display is the prime factor of virtual reality headsets.

(HFU) Haptic Feedback Unit:

The proposed HFU requires a microcontroller, Arduino – Grove Vibration Motor or Adafruit Vibrating Mini Motor Disc and a Bluetooth transmitter HC06Module.

Haptic technology, also known as kinaesthetic communication or 3D touch any technology that can create an experience of touch by applying forces, vibrations, or motions to the user is Haptic Feedback Unit

MECHANISM:

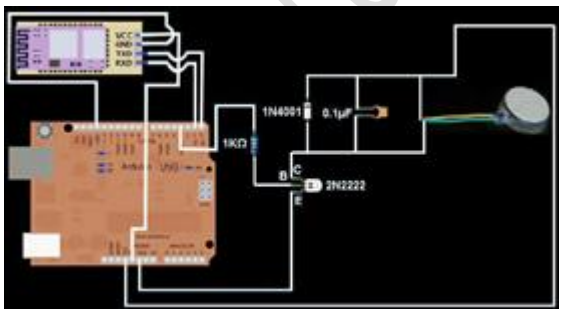

A side from using a grouping of force, vibration and motions, haptic technologies use a force response loop to manipulate the undertaking of the user and go beyond a simple vibration alert. The simple principle of a haptic sensor is the generation of an electric current that energy a reaction to create a vibration.

Middle VR andVRPN:

The demonstration of 3D in sequence in space is not normalizing. Sometimes poignant a chaser from the user to the screen can be seen as an augment of price on the Z axis, every now and then as a decrease of value on the Y axis. This is dependent on the way the device reports its data and how the driver that interprets this data exposes it to VRPN.One easy way to configure the axis of a VRPN device is first to add it without modifying the existing Right/Front/Up definition. Then go to the 3D nodes label, allocate the piece of equipment to any node, for example the HandNode.Now try to move the 3D tracker to the right, to the front part (going not here from the user on the way to the computer screen), and upwards. If the 3D node moves correctly, you're lucky, your calibration is done.

(MCU)MotionCaptureUnitandNetwork:

Proposal imprison is the process of recording the society of objects or people. It is used in military, hobby, sports, medical applications, and for legalization of computer visualization and robotics.

Motion capture sessions, movements of one is sampled many times per second. Whereas early technique used images from many cameras to calculate 3Dimentioanal positions, Often the reason of motion capture is to trace only the actions of the actor, not his or her visual appearance. This animatronics data is map to a 3Dimentional model so that the model performs the same actions as the actor. This may be gap with the older practice of rot scoping, as seen in Bash's The Lord of the Rings and American Pop .

IV.SURVEY OF USABLITY:

The hunt has been made on three assorted search strings: “Immersive Virtual Reality Education”, “Oculus Rift Education” and “Head Mounted Display Education”. The first cord, “Immersive Virtual Reality Education”, gave us an idea of the over-all use of Immersive VR in education, including also the CAVE-based lines. We then annoyed to focus on VR goggles, with certain value to Oculus Rift because we believe it to be an extremely sensational device due to its narrow costs and great transportability. However, the search explicitly focused on the Oculus Device gave nearly no grades at all, so we decided to expand the search by replacing “Oculus Rift” with “Head Mounted Display”. The grades are interesting and will be chatted later on, although the search has also delivered some results, which are more in the field of Augmented Reality2 (AR) rather than VR.

After inspecting the following databases: Web of Knowledge, Google Scholar, and Scopus, an in-depth exploration of the field was carried out by referring to the Scopus results

THE KINECT VR GAME: LOST SPIRIT:

They developed a VR game called Lost Spirit to test the most natural interaction in a flying-as-navigation experience. The player can fly above a forest, as well as complete tasks such as finding and collecting five hidden items in the dark forest; and handing them over to the final Gate Tree to finish. In the game, the player wears an Oculus Rift DK2 HMD with headphones, and controls his/her flying movement using predefined body gestures via a Kinect tracking sensor.

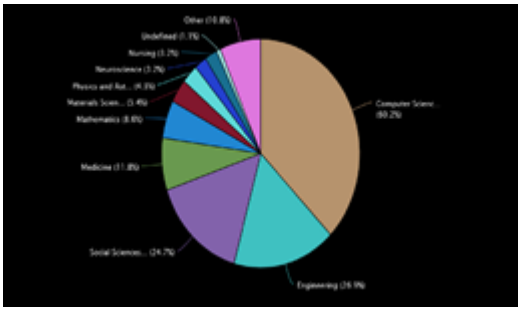

FUTURE OF VR:

In future where people are cut off from the real world, opting instead to spend their time in VR.It’s an exciting time for virtual reality and the best VR headsets. After a cooling-off period following the molten hot start VR had, we’re starting to see companies settling in for the long haul. That means continuing investment, especially in the hardware platforms themselves, and the fruit of those investments is starting to ripen.

SuperData: Oculus Quest will mainstream VR in 2019, but AR will lead by 2021. ... Augmented sale of VR software are planned to transport the VR market total tow to $3.3 billion for the year, up from $2.8 billion in 2017, with much stronger hardware and software sales causative to a $6.9 billion estimate for 2019.

V.CONCLUSION:

The world in which the facility to access virtual reality was hindered by the pressing clique of the anti-VR movement, would be a fabulous downfall and a signal to our own ignorance in times of industrial progress. Virtual Reality is arguably the next pace towards a current/post-modern era of advance. The potential ground breaking effects that loom after these machines is weird. With the skill to save lives, act as a medium for industry development and argument, and offer its users with endless hours of entertainment, learning, and discovery, the world should

be pushing for an increased charisma of this product, just the same as it did in the 90's. This time about, our technology will have come isolated enough to maintain the needs for these plan and will start in on utilize virtual reality surrounded by homes, medical centres and offices.

REFERENCES:

[1] Lionel Jayaraj* James Wood[Ɨ]Marcia Gibson[‡]
University of Bedfordshire University of Bedfordshire University of Bedfordshire

[2] Laura Freina, MichelaOtt Institute for Educational Technology, CNR, Genova, Italy freina@itd.cnr.it, ott@.itd.cnr.it

[3] Aki Järvinen, Ph.D. Sheffield Hallam University City Campus, Howard Street Sheffield, S1 1WB, United Kingdom +44(0)7983462316 a.jarvinen@shu.ac.uk

[4] Xin Tong, Alexandra Kitson, MahsooSalimi, Dave FracchiaDiane Gromala, Bernhard E. Riecke, Simon Fraser University
250 -13450 102Avenue, Surrey, BC, CANADA.