Journal of Engineering Sciences
Vol 10, Issue 11, Nov /2019
ISSN NO:0377-9254

FLUID SOLID INTERACTION ANALYSIS OF AIRCRAFT WINDSHIELD BY USING FEA TECHNIQUE

[1]SAMPATHI SUDHEER KUMAR , [2]D. RANJITH KUMAR , [3] RAYAPURI ASHOK
[#]Department of mechanical engineering,
Bheema Institute of Technology and Science,Alur road, Adoni, JNTUA

ABSTRACT

The most widely used material for light trainer aircraft windshield is Glass. In the present work, it is proposed to replace the existing glass for a light trainer. In the present work two different materials were considered namely Polyethylene Terephthalate and polycarbonate for windshield. Windshield modeling was done in 3D using CREO software. Dynamic analysis was carried out by Computational Fluid Dynamics (CFD), Fluid-Solid-Interaction (FSI) approach and ANSYS in order to evaluate fluid pressure, stress distribution and deformation in windshield with different air speeds. The analysis is carried out for all the three different materials at various air speeds of 1200,1000,800 and 600km/hr.In this thesis, the FSI analysis to determine the pressure, velocity, stress and deformation at different speeds and materials.

INTRODUCTION

In the earliest parts of the 20th Century, an Alabama woman makes a trip to New York City; the cold and stormy weather, and the way it affected her travels, led to the invention of a technology that the vast majority of car owners take for granted today. Without the work of Hall of Fame inventor Mary Anderson, who invented the windshield wiper more than one hundred years ago, driver visibility while it rains or snows would be greatly diminished, leading to great risks in driver and passenger safety.Every so often, we return to our Evolution of Technology series here at IPWatchdog to chronicle the progression of a technology that truly permeated our daily lives. We all take windshield wipers for granted, even if we may be grateful for them when an intense storm hits suddenly during our commutes. The interesting story of Mary Anderson's development of the windshield wiper involves an ingenious solution to a common problem and the creation of a technology that was ahead of its time.

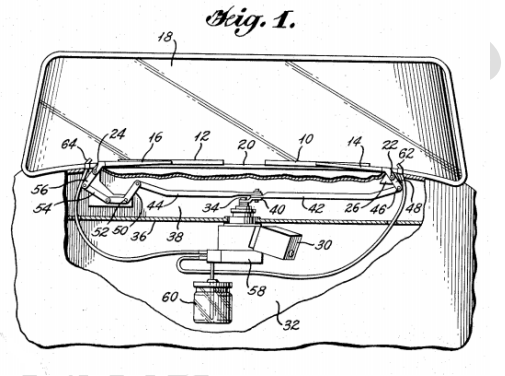

Applications

Cole Motorsports has the ability to supply you with custom laser cut laminate film glass protection. If we are provided a drawing we can deliver a prototype within days and ready for production within hours of approval. We provide numerous applications, that are being used by government, private, and corporate entities. Some of our Clients include the US Army, the US Coast Guard, NYCT, Arrow Transit, Dura Automotive as well as GM Corvette and Ganassi Racing. I am sure we can provide a solution to fit your needs. Our multi layer laminate films are considered the best in the world.

USAGE OF WINDSHIELD

Windshields protect the vehicle's occupants from wind and flying debris such as dust, insects, and rocks, and provide an aerodynamically formed window towards the front. Ultra Violet coating may be applied to outside of the screen to avoid harmful ultraviolet radiation. However, this is usually unnecessary since most auto windshields are made from laminated safety glass. The majority of UV-B is absorbed by the glass itself, and any remaining UV-B together with most of the UV-A is absorbed by the PVB bonding layer.

On motorbikes their main function is to shield the rider from wind, though not as completely as in a car. The main function of windshield in sports and racing motorcycles is to reduce the drag when the rider

attains the optimal aerodynamic configuration with his or her body in unison with the machine, and does not shield the rider from wind when sitting upright.

LOADS ACTING ON THE STRUCTURE

During normal service condition the vehicle is subjected to aerodynamic forces such as the Drag, Lift and Side forces. Side force has significance in the event of heavy cross winds. The windshield is mainly subjected to aerodynamic drag force which acts against the forward motion of the vehicle. The drag force is divided into five constituents and the pressure drag which is closely associated with the external shape of the vehicle is the most significant among these. It depends on the velocity, area and the drag coefficient. Therefore the total drag force is given by (1) where the contemporary automobiles achieve a drag coefficient of about 0.30 to 0.35. $FD = 1\ 2\ \rho V\ 2a\ CD$ (1)

This pressure drag is considered to be acting on the vehicle at a particular velocity and the raking of the windshield plays a significant role in reducing the drag coefficient thereby reducing the drag force [5]. The drag pressure is given by,

$PD = 1\ 2\ \rho\ V\ 2CD$ (2)

LITERATURE REVIEW

Design And Analysis Of Alternative Material For Bird Strike On Aircraft Windshield[1] Annotation at the beginning of the paper and the full text of the paper should be written in English - Franklin Gothic Medium 9 point. Abstract should be in the range of at least 10 and a maximum of 15 lines. Paper must be to prepare for direct reproduction in A4 format. It is recommended to use a text editor Microsoft Word or similar program. The editorial calls for the use of a template set that is as well as other documents available on the website of this magazine. The author is required with each post, to be published in the professional, peer-reviewed journals, send a contract for the transfer of author-human rights and send to the address of the editorial.

A Design Space to Support the Development of Windshield Applications for the Car[2] In this paper we present a design space for interactive windshield displays in vehicles and discuss how this design space can support designers in creating windshield applications for drivers, passengers, and pedestrians. Our work is motivated by numerous examples in other HCI-related areas where seminal design space papers served as a valuable basis to evolve the respective field – most notably mobile devices, automotive user interfaces, and interactive public displays. The presented design space is based on a comprehensive literature review. Furthermore we present a classification of 211 windshield applications, derived from a survey of research projects and commercial products as well as from focus groups. We showcase the utility of our work for designers of windshield applications through two scenarios. Overall, our design space can help building applications for diverse use cases. This includes apps inside and outside the car as well as applications for specific domains such as fire fighters, police, and ambulance

PROBLEM DESCRIPTION AND METHODOLOGY

Dynamic analysis was carried out by Computational Fluid Dynamics (CFD), Fluid-Solid-Interaction (FSI) approach and ANSYS in order to evaluate fluid pressure, stress distribution and deformation in windshield with different air speeds. The analysis is carried out for all the three different materials at various air speeds of 1200,1000,800 and 600km/hr.

In the present work two different materials were considered namely Polyethylene Terephthalate and poly carbonate for windshield. Windshield modeling was done in 3D using Pro/Engineer software.

Speed (km/hr)	Materials
1200	**Glass, polyethylene terephthalate& Poly carbonate**
1000	
800	
600	

INTRODUCTION TO CAD

Computer-aided design (CAD) is the use of computer systems (or workstations) to aid in the creation, modification, analysis, or optimization of a design. CAD software is used to increase the productivity of the designer, improve the quality of design, improve communications through documentation, and to create a database for manufacturing. CAD output is often in the form of electronic files for print, machining, or other manufacturing operations. The

term CADD (for Computer Aided Design and Drafting) is also used.

INTRODUCTION TO CREO

Pro/ENGINEER, PTC's parametric, integrated 3D CAD/CAM/CAE solution, is used by discrete manufacturers for mechanical engineering, design and manufacturing.

Created by Dr. Samuel P. Geisberg in the mid-1980s, Pro/ENGINEER was the industry's first successful parametric, 3D CAD modeling system. The parametric modeling approach uses parameters, dimensions, features, and relationships to capture intended product behavior and create a recipe which enables design automation and the optimization of design and product development processes.

INTRODUCTION TO FEA

Finite element evaluation is a manner of fixing, typically about, exceptional troubles in engineering and era. It is used mainly for problems for which no actual answer, expressible in some mathematical form, is available. As such, it is a numerical instead of an analytical approach. Methods of this kind are wanted because of the truth analytical techniques can not cope with the real, complicated problems which might be met with in engineering. For instance, engineering electricity of substances or the mathematical concept of elasticity can be used to calculate analytically the stresses and strains in a dishonest beam, but neither can be very a achievement in locating out what's taking region in part of a car suspension device inside the direction of cornering.

Introduction to Fluid–structure interaction (FSI)

Fluid–structure interaction (FSI) is the interaction of some movable or deformable structure with an internal or surrounding fluid flow.[1] Fluid–structure interactions can be stable or oscillatory. In oscillatory interactions, the strain induced in the solid structure causes it to move such that the source of strain is reduced, and the structure returns to its former state only for the process to repeat.

Fluid–structure interactions are a crucial consideration in the design of many engineering systems, e.g. aircraft, spacecraft, engines and bridges. Failing to consider the effects of oscillatory interactions can be catastrophic, especially in structures comprising materials susceptible to fatigue.

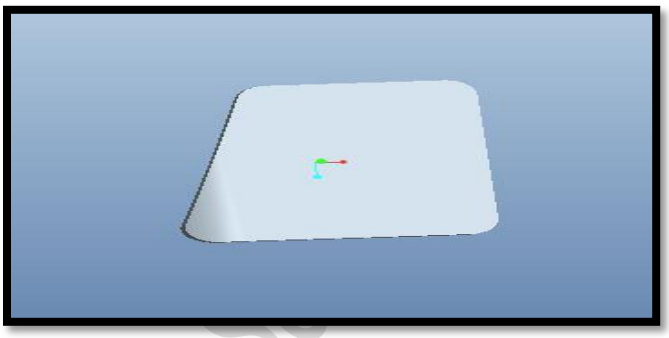

3D model of wind shield

2d drawing

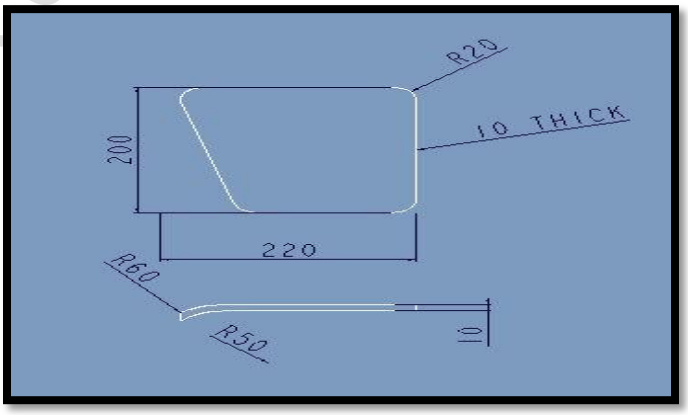

CFD & Structural analysis of windshield (FSI - Fluid Structure Interface

MATERIAL- Polyethylene Terephthalate

DEFORMATION

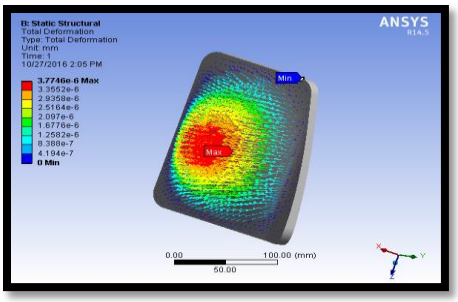

we get to know this technique gives the deformation of the wind shield due to action of opposed air forces developed which is important for accurate performance of the wind shield operation under severe conditions.

It is observed that there is substantial amount of deformation of the wind shield. When the loads applied i.e. velocity and pressure are imported and applied on wind shield, the maximum deformation value is 3.7746e-6.

STRESS

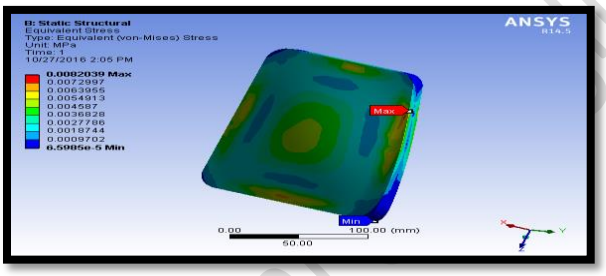

When the loads i.e. pressure and velocity applied on wind shield, the maximum stress value is 0.0082039maxMPa at one side of the edge of the wind shield and minimum stress is 6.5985e-5MPa.

STRAIN

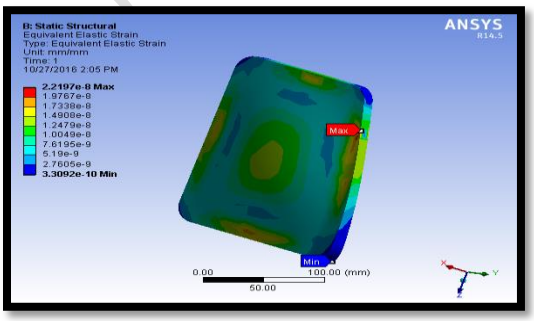

When the loads i.e. pressure and velocity applied on wind shield, the maximum strain value is 1.2947e-7 at one side of the edge of the wind shield and minimum strain is 2.2197e-8.

AT SPEED 800 km/hr

PRESSURE CONTOUR

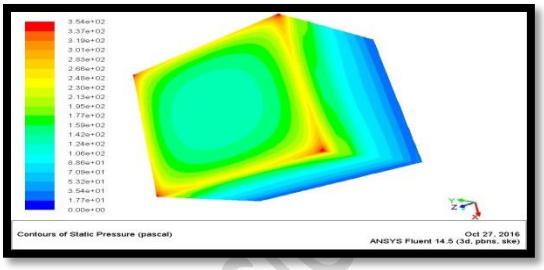

According to the above contour plot, the maximum static pressure at corner portions of the boundary of inlet and minimum static pressure at the boundary of outlet.According to the above contour plot, the maximum pressure is 3.54e+02Pa and minimum static pressure is 0.00e+00Pa.

Velocity Magnitude

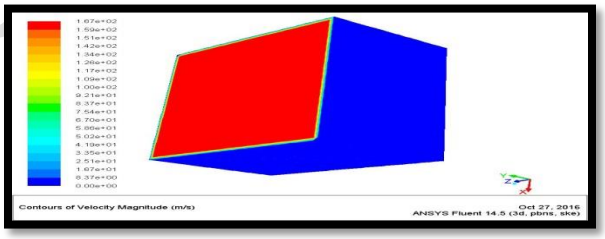

According to the above contour plot, the maximum velocity magnitude of the wind shield at inside of the boundary and minimum velocity magnitude at outside of the boundary. According to the above contour plot, the maximum velocity is 1.67e+02m/s and minimum velocity is 0.00e+00m/s.

CFD RESULT TABLE

Speed km/hr	Pressure(Pa)
1200	7.51e+02
1000	6.07e+02
800	3.54e+02
600	1.66e+02

STATIC ANALYSIS RESULT TABLE

Speed km/hr	materials	Deformation(mm)	Stress(MPa)	Strain
1200	Glass	2.5173e-5	0.0082824	1.2947e-7
	Polyethylene Terephthalate	3.7746e-6	0.0082039	2.2197e-8
	Poly carbonate	0.000533	0.0082324	3.1699e-6
1000	Glass	2.0156e-5	0.0066598	1.041e-7
	polymethyl methacrylate	3.0223e-6	0.0068007	1.7859e-8
	Poly carbonate	0.00042677	0.0066238	2.5505e-6
800	Glass	1.1825e-5	0.0039146	6.1193e-8
	Polyethylene Terephthalate	1.7731e-6	0.0038801	1.0498e-8

CONCLUSION

In this report, a windshield for a light trainer aircraft is analyzed by using computational fluid dynamics (CFD) and fluid-solid-interaction (FSI) approach with different air speeds using ANSYS in order to evaluate fluid pressure, stress distribution and deformation. Windshield is modeled in 3D by using software Pro-E Wildfire 5.0. Three different materials like glass, polyethylene terephthalateand poly carbonate were considered to analyze the deformation and stress at various speeds of 1200, 1000, 800 and 600 km/hr. By observing the CFD analysis results, the pressure and velocity are increasing by increasing air speed. By observing the CFD analysis the pressure drop and velocity increases by increasing the speed km/hr.By observing the static analysis, the stress values are decreases by decreasing the speeds, the taken different pressure values are from CFD analysis. The stress value is less for polyethylene terephthalatematerial than glass and poly carbonate

So we can conclude that the polyethylene terephthalatematerial is better for wind shield.

SCOPE FOR FUTURE WORK:

The same analysis can be done for the other thermoplastic materials which are less in weight like Polyurethane, polyester, polypropylene.

The same analysis can be done at other speeds of the aircraft

REFERENCES

[1] T. Pyttel, H. Liebertz, and J. Cai, "Failure Criterion for Laminated Glass under Impact Loading and its Application in Finite Element Simulation". International Journal of Impact Engineering. 38. pp 252-263, 2011

[2] Y. Peng, J. Yang., C. Deck and R. Willinger "Finite element modeling of crash test behavior for windshield laminated glass". International Journal of Impact Engineering. 57. pp 27-35, 2013.

[3] L. Morello, L. R. Rosini, G. Pia and A. Tonoli, The Automobile Body Volume 1: Components Design. Springer Publication. New York, 2011.

[4] M. Timmel, S. Kolling, P. Osterrieder, and P.A. Du Bois, "A Finite Element Model for Impact Simulation with Laminated Glass". International Journal of Impact Engineering. 34. pp 1465-1478, 2007. [5] J. S. SmithAn Introduction to Modern Vehicle Design". Butterworth- Heinemann, Oxford, 2002.

[6] J. XZ, Y. Li, G. Lu and W. Zhou, " Reconstruction Model of Vehicle Impact Speed in Pedestrian – Vehicle Accident" International Journal of Impact Engineering. 36. 783-788, 2009.

[7] S. Sarkar, S. Majumdar and A.R. Choudhwary, "Response Of Human Head Under Static and Dynamic Load Using Finite Element Method". Trends Biomater. Artif. Organs.17. pp 130-134, 2004.

[8] J. R Vinson, The behavior of shells composed of isotropic and composite materials. Springer Science + Business Media. Dordrecht. 1993.

[9] ANSYS 12.1 Documentation preview, Theory of reference and element library.

[10] LS-DYNA 3D: Theoretical Manual. Livermore Software Technology Cooperation, USA.