Journal of Engineering Sciences
Vol 10, Issue 12, DEC/2019
ISSN NO:0377-9254

REAL-TIME PATIENT HEALTH MONITORING AND ALARMING USING WIRELESS-SENSOR-NETWORK

#1A.AVINASH, M.Tech Student,

#2B.BHARGAVENDRA, Associate Professor,

Dept of ECE,

VAAGESWARI COLLEGE OF ENGINEERING, KARIMNAGAR, TELANGANA.

Abstract— The main objective of this research is design and realization of real-time monitoring and alarming system for patient health, especially for patients suffering from diseases during their normal life. The proposed system has an embedded microcontroller connected to a set of medical sensors (related to the patient case) and a wireless communication module (Bluetooth). Each patient is considered as a node in a wireless sensor network and connected to a central node installed at the medical center through an internet connection. The embedded microcontroller checks if the patient health status is going well or not by analyzing the scanned medical signals. If the analysis results are abnormal, the embedded unit uses the patient's phone to transmit these signals directly to the medical center. In this case, the doctor will send medical advice to the patient to save his/her life. The implemented prototype has been tested and calibrated with standard devices. The experimental results confirm the effectiveness of the proposed system that is accurate in scanning, clear in monitoring, intelligent in decision making, reliable in communication, and cheap (about 100 US$).

Keywords: Health care; Patient monitor; Remote device; Biomedical device; ECG monitoring; Outdoor patient monitoring.

---

1. INTRODUCTION

Health monitoring systems become a hot topic and important research field today. Research on health monitoring were developed for many applications such as military, homecare unit, hospital, sports training and activity emergency monitoring system. In this paper, we developed the wearable and real-time monitoring system of some critical vital signs for elderly people, because Thai people who ages over 60 years old encounter accidental incidents over 60 percent. [1] That system may help doctor or people in family monitor the emergency alarm from patient or elderly people. The vital signs of health status that are the important parameter in health monitoring system consist of blood pressure, heart rate, oxygen saturation, body temperature and respiratory rate.[2] In this work, we consider two parameters of the vital signs which are heart rate and oxygen saturation in blood. That vital sign can measure by using device namely; pulse oximeter. The pulse oximetry data are important for doctor to monitor patient's health condition. The data helps to prevent and protect the oxygen lack in monitored patient's blood stream. This condition will occurs when the brain does not receive enough oxygen is called cerebral hypoxia [3]. Moreover, pulse oximetry data can predict the patient's disease and accident situation. Wireless technology was developed in many applications that becoming a part of human activities such as agriculture, military, medical care, smart home system etc. Distinctly, wireless sensor networks (WSN) play a crucial role in such a monitoring system application, for the reason that WSN can offer some advantages over other types of wireless systems, especially its scalability, power management and flexibility of architecture. As a matter of fact, there are two popular standards in the wireless personal area network (WPAN), namely, Bluetooth and ZigBee. This work was focused on the capability of wireless sensor networks as an efficient tool to monitor health in term of pulse oximetry data for demonstration. This situation makes it difficult to develop and challenge because many applications in WSNs developed for

fixing the position of member in wireless personal area network (WPAN). We adopted the ZigBee for using as a real-time health monitoring system on a patient.

Chung and his group proposed WSN-based mobile healthcare monitoring system with ECG and blood pressure measurement, where the mobile phone performs continuous data analysis and then transmits data over a wireless sensor network. In today's critical care environment, regardless of your age, disease or condition. it is very likely that you will receive the same type of patient monitoring. This traditional monitoring can include ECG leads that record cardiac rhythm and heart rate and SpO2 probes that capture blood oxygen saturation levels along with other vital sign measurements.

This is mainly because these general parameters are the bone for the physician to know what to do in general. However, the fast change of health parameters is the big challenges, especially when the patient is outside home doing any usual activity and feels something wrong, and when arrived the hospital for testing, they find that everything is normal. In fact, it is not easy to detect all kinds of abnormal activity unless real-time monitoring, which can be done either by keeping the patient in the hospital for few days or more (which will of course lead to high costs). In such a case, a wireless real-time portable monitoring device can be used to help the physician and the medical center to give proper medical treatment and procedures. It is so important to integrate low-power electronic devices, such as sensors and a microcontroller, with wireless communication technology to open new research trends in healthcare applications. The main objective of the project is to design and implement a real-time monitoring system for healthcare applications. The system is based on a single-chip microcontroller equipped with set of sensors and wireless communication unit. Most of the e-health monitoring systems are offline units based on personal computers or smart phones used to send patient's health data to the health centers. In this research, the patient's cell phone is used to transfer realtime medical information between patients and medical center.

2. RELATED WORKS

This system is mainly used to monitor the health condition automatically. In this system, we use the heartbeat sensor, Breath sensor, Pressure sensor, Electrocardiography (ECG), Temperature sensor, for monitoring the patient heath. Any one condition abnormal sending Message through GSM to Personal Doctor. All the information is send to internet through IOT. Real time mobile healthcare system for monitoring the patient's condition from indoor or outdoor locations [3]. A bio-signal sensor and a smartphone are the major components of the system. The data has been collected by the bio-signal sensor and are transmitted to an intelligent server via GSM network. The GSM system is able to monitor the location of the patient. The proposed system consists of a body sensor network that is used to measure and collect Physiological data of patient. A system to monitor the blood pressure of a hypertensive patient using mobile technologies has been proposed in [4]. By using the system a doctor can carefully monitor the patient and can perform diagnosis. In order to monitor the breathing disease called Obstructive Sleep Apnea Syndrome (OSAS), occurs due to sleep disorder, has been introduced in [5]. This disease not only interrupts normal sleep pattern but also causes hypoxemia and hypercapnia.

3. Hardware Used Arm Microcontroller

- Power Supply.
- Blood pressure Sensor.
- ECG Sensor.
- Temperature Sensor.
- Breathe sensor
- GSM
- Alarm'
- IOT
- LCD

- **Software Used**
- MP LAB
- Embedded C
- Proteus 8.0 Professional.

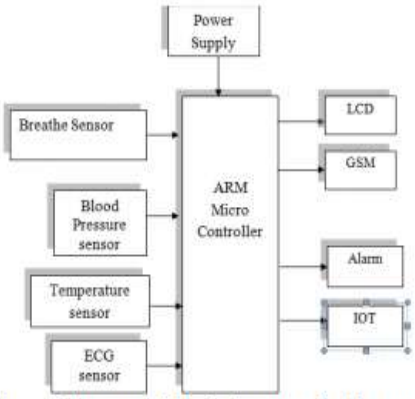

Figure.1.The general block diagram of the components.

A. ARM MICROCONTROLLER

The LPC2138 microcontrollers are based on a 16/32-bit ARM7TDMI-S CPU with real-time emulation and embedded trace support, that combine the microcontroller with 32 kB, 64 kB, 128 kB, 256 kB and 512 kB of embedded high-speed flash memory. A 128-bit wide memory interface and a unique accelerator architecture enable 32-bit code execution at maximum clock rate. For critical code size applications, the alternative 16-bit Thumb mode reduces code by more than 30 % with minimal performance penalty. Due to their tiny size and low power consumption, these microcontrollers are ideal for applications where miniaturization is a key requirement, such as access control and point-of-sale. W ith a wide range of serial communications interfaces and on-chip SRAM options of 8 kB, 16 kB, and 32 kB, they are very well suited for communication gateways and protocol converters, soft modems, voice recognition and low-end imaging, providing both large buffer size and high processing power. Various 32-bit timers, single or dual 10-bit 8-channel ADC(s), 10-bit DAC, PWM channels and 47 GPIO lines with up to nine edge or level sensitive external interrupt pins make these microcontrollers particularly suitable for industrial control and medical systems

Figure. 2.ARM microcontroller Diagram

B. BLOOD PRESSURE SENSOR

BP is a measurement used in medicine. In the body, the arteries carry blood away from the heart. As blood travels through the arteries, it presses against the walls of the arteries. Blood pressure measures how hard the blood is pushing against the walls of the arteries. Usually, "blood pressure" measures the pressure in larger arteries delivering blood to body parts other than the lungs, like the brachial artery in the arm. Blood pressure is usually measured in millimeters of mercury (mmHg). There are two numbers in a blood pressure. The first is the systolic pressure. It measures how hard the blood pushes against the walls of the arteries when the heart is in systole (beating and pushing out blood). This is when the pressure against the walls of the arteries is highest. The second number is the diastolic blood pressure. It measures how hard the blood pushes against the walls of the arteries when the heart is in diastole (resting between beats and not pushing out any blood). For example, in the picture on this page, the pressure on the walls of the arteries is 122 mmHg when the heart is beating and 65 mmHg when the heart is resting. This blood pressure would be written as "122/65" and read as "122 over 65." Mean arterial pressure is a person's average blood pressure. Pulse pressure is the difference between the systolic and diastolic pressures. To measure blood pressure, doctors use a device called a sphygmomanometer. Blood pressure is of two types High blood pressure and Low blood pressure.

i) High blood pressure is called hypertension. A person has hypertension if their blood pressure is high and stays high over time. Hypertension is very common. About one in every three adults in the United States has high blood pressure. Hypertension is sometimes called "the silent killer" because it often causes no symptoms; so many

people have high blood pressure without realizing that anything is wrong. However, hypertension can hurt the heart, blood vessels, kidneys, and other parts of the body. It can cause serious health problems like heart attack, stroke, and kidney failure.

ii) Low blood pressure is called hypotension. If the blood pressure is too low, the heart, brain, and other parts of the body do not get enough blood and oxygen. Low blood pressure can cause problems like dizziness and fainting. If a person's blood pressure is low enough, they can have seizures, lose consciousness, and even die.

Figure.3.Blood Pressure Sensor

C. POWER SUPPLY

A power supply is an electronic device that supplies electric energy to an electrical load. The primary function of a power supply is to convert one form of electrical energy to another and, as a result, power supplies are sometimes referred to as electric power converters. Some power supplies are discrete, stand-alone devices, whereas others are built into larger devices along with their loads. The power supply section is the important one. It should deliver constant output regulated power supply for successful working of the project. A 0-12V/1 mA transformer is used for this purpose. The primary of this transformer is connected in to main supply through on/off switch& fuse for protecting from overload and short circuit protection. The secondary is connected to the diodes to convert 12V AC to 12V DC voltage. And filtered by the capacitors, which is further regulated to +5v, by using IC 7805.

D. ECG SENSOR

Electrocardiography (ECG or EKG) is the process of recording the electrical activity of the heart over a period of time using electrodes placed on the skin. These electrodes detect the tiny electrical changes on the skin that arise from the heart muscle's electro physiologic pattern of depolarizing during each heartbeat. It is a very commonly performed cardiology test. In a conventional 12-lead ECG, 10 electrodes are placed on the patient's limbs and on the surface of the chest. The overall magnitude of the heart's electrical potential is then measured from 12 different angles ("leads") and is recorded over a period of time (usually 10 seconds). In this way, the overall magnitude and direction of the heart's electrical depolarization is captured at each moment throughout the cardiac cycle. The graph of voltage versus time produced by this noninvasive medical procedure is referred to as an electrocardiogram. During each heartbeat, a healthy heart has an orderly progression of depolarization that starts with pacemaker cells in the Sino atrial node, spreads out through the atrium, passes through the atrioventricular node down into the bundle of His and into the Purkinje fibers, spreading down and to the left throughout the ventricles. This orderly pattern of depolarization gives rise to the characteristic ECG tracing.

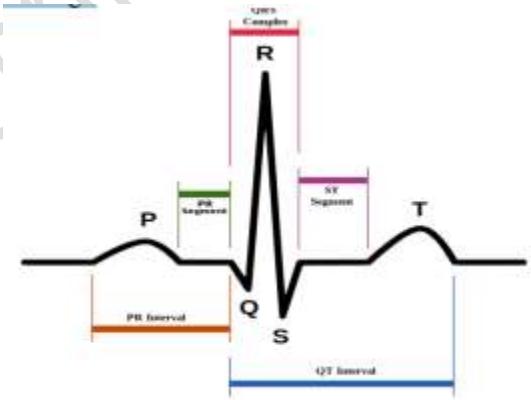

Figure.4.ECG Wave form

To the trained clinician, an ECG conveys a large amount of information about the structure of the heart and the function of its electrical conduction system. Among other things, an ECG can be used to measure the rate and rhythm of heartbeats, the size and position of the heart chambers, the presence of any damage to the heart's muscle cells or conduction system, the effects of cardiac drugs, and the function of implanted pacemakers.

E. TEMPERATURE SENSOR

The LM35 is an integrated circuit sensor that can be used to measure temperature with an electrical output proportional to the temperature (in oC) .The normal range due to an increase in the body's temperature is set. There is not a single agreed-

upon upper limit for normal temperature with sources using values between 37.5 and 38.3 °C (99.5 and 100.9 °F). The increase in set-point triggers increased muscle contraction and causes a feeling of cold. This results in greater heat production and efforts to conserve heat. When the set-point temperature returns to normal, a person feels hot, becomes flushed, and may begin to sweat. Rarely a fever may trigger a febrile seizure. This is more common in young children. Fevers do not typically go higher than 41 to 42 °C (105.8 to 107.6 °F).

F. BREATH SENSOR

Respiratory disease is a medical term that encompasses pathological that conditions affecting the organs and tissues that make gas exchange possible in higher organisms, and includes conditions of the upper respiratory tract, trachea, bronchioles, alveoli, pleura and pleural cavity, bronchi, and the nerves and muscles of breathing. Respiratory diseases range from mild and self-limiting, such as the common cold, to life threatening entities like bacterial pneumonia, pulmonary embolis m, acute asthma and lung cancer .The study of respiratory disease is known as pulmonology. A doctor who specializes in respiratory disease is known as a pulmonologist, a chest medicine specialist, a respiratory medicine specialist, a respirologist or a thoracic medicine specialist. UBET Respiratory diseases can be classified in many different ways, including by the organ or tissue involved, by the type and pattern of associated signs and symptoms, or by the cause (aetiology) of the disease.

Figure.5.Breath Sensor

G. IOT

The internet of things (IOT) is the network of physical devices, vehicles, buildings and other items embedded with electronics, software, sensors, actuators, and network connectivity that enable these objects to collect and exchange data. In 2013 the Global Standards Initiative on Internet of Things (IOT-GSI) defined the IOT as "the infrastructure of the information society. The IOT allows objects to be sensed and controlled remotely across existing network infrastructure, creating opportunities for more direct integration of the physical world into computer-based systems, and resulting in improved efficiency, accuracy and economic benefit. When IOT is augmented with sensors and actuators, the technology becomes an instance of the more general class of cyber-physical systems, which also encompasses technologies such as smart grids, smart homes, intelligent transportation and smart cities. Each thing is uniquely identifiable through its embedded computing system but is able to interoperate within the existing Internet infrastructure. Experts estimate that the IOT will consist of almost 50 billion objects by 2020.

H. GSM

A GSM modem is a wireless modem that works with a GSM wireless network. A wireless modem behaves like a dial-up modem. The main difference between them is that a dial-up modem sends and receives data through a fixed telephone line while a wireless modem sends and receives data through radio waves. The working of GSM modem is based on commands, the commands always start with AT (which means Attention) and finish with a character. For example, the dialing command is ATD; ATD3314629080; here the dialing command ends with semicolon. The AT commands are given to the GSM modem with the help of PC or controller. The GSM modem is serially interfaced with the controller with the help of MAX 232. Here max 232 acts as driver which converts TTL levels to the RS 232 levels. For serial interface GSM modem requires the signal based on RS 232 levels. The T1_OUT and R1_IN pin of MAX 232 is connected to the TX and RX pin of GSM modem

I. LCD

The most commonly used Character based LCDs are based on Hitachi's HD44780 controller or other which are compatible with HD44580. In this tutorial, we will discuss about character based LCDs, their interfacing with various microcontrollers, various interfaces (8-bit/4-bit), programming, special stuff and tricks you can do

with these simple looking LCDs which can give a new look to your application.

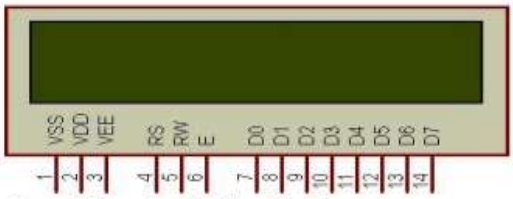

Figure.6.Character LCD type Pin diagram.

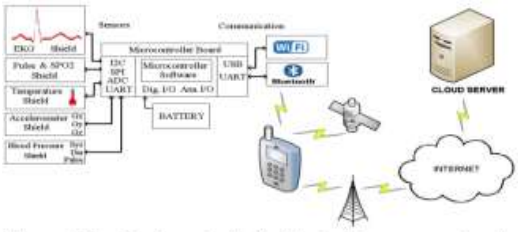

Figure.7.Monitoring device's block diagram and network structure

Figure.8.Determine the location through GPS

J. ALARM

An alarm device or system of alarm devices gives an audible, visual or other form of alarm signal about a problem or condition. Alarm devices are often outfitted with a siren.

K. PROTEUS 8.0 PROFESSIONAL

Proteus 8.0 professional is a best simulation for various designs with microcontroller. It's mainly popular because of availability of almost all microcontrollers in it. So it's handy tool to test programs & embedded design for electronics hobbyist. You can simulate your programming of microcontroller in Proteus 8.0 Simulation Software. After simulating your circuit in Proteus 8.0 Software you can directly make PCB design with it so it could be an all in one package for student and hobbyists. Proteus is a virtual System Modeling & circuit Simulation application. The suite combine mixed mode SPICE circuit simulation, animated components & microprocessor model to facilitate co-simulation of complete microcontroller based design. Proteus also has the ability to simulate the interaction between software running on a microcontroller and any analog or digital electronics connected to it .It simulates Input/ Output ports , interrupts ,timers ,USART & all other peripherals present on each support processor.

4. SYSTEM CALIBRATION AND TESTING

The implemented monitoring and alarming system has been tested to make sure that all components work properly. The system hardware and software has been initially prepared, then the selected sensors were linked with the human body. The wireless communication channel between patient side and the medical center is achieved if the remote server at the medical center is connected to the internet. The server database involves full information about the patient including the recording of a patient's physiological parameters, such as heartbeat rate, ECG signal, blood pressure, collection of laboratory results, and assessment of a patient's health status. During system testing and calibration, the following setting parameters were considered;

- Four sensors; Temperature, ECG, Heart beat rate.

- Heart beat rate: (60-100) click per minute for normal rate.

- Measuring cycle: 60 seconds.

- Normal physiological parameters setting of the patient, such as average heartbeat rate and blood pressure rates, ECG signal parameters, etc.

- The measured signals are used to calculate the critical biomedical parameters, and if it is

abnormal, the microcontroller will send a request to the remote server to record the patient's health data.

- The patient can monitor his/her biomedical data using his/her phone.

- An external flash memory can be connected to the embedded sensing unit to be used as an external database.

Several experimental tests have been achieved in the medical center of Philadelphia University to check the functionality and accuracy of the implemented system. The heartbeat waveform, ECG signal, and other medical parameters generated from the implemented prototype are almost identical to what obtained generated from the recommended devices at the medical center as illustrated in Fig 9 & Table II. It is clear, that the proposed system is accurate in scanning, clear in monitoring, intelligent in decision making, and reliable in communication.

The obtained results can be monitored by the patient through friendly GUI as shown in Fig.10. It is clear, that the proposed system is accurate in scanning, clear in monitoring, intelligent in decision making, and reliable in communication, and cheap (about 100USD).

Fig. 9 : Normal ECG waveform recorded from the prototype.

TABLE II: SENSOR CHARACTERISTICS.

Parameter	Implemented Device	Medical Center Device
Temperature	37.3 °C	37.3 °C
Oxygen level	93%	92%
Heart rate	88 bpm	88 bpm
Heart beat waveform	Looks Identical	Looks Identical
ECG test	Looks Identical	Looks Identical
Blood pressure (H/L)	130/91 mmHg	128/89 mmhg

Fig.10 :The GUI monitoring on the patient's phone.

5. CONCLUSION

The availability of low-cost single-chip microcontrollers, and advances in wireless communication technology has encouraged engineers to design low-cost embedded systems for healthcare monitoring applications. Such systems have ability to process real-time signals generated from biosensors and transmit the measured signals through the patient's phone to the medical center's server. The functionality and readings of the implemented prototype has been tested and compared with reliable, standard and calibrated medical devices in the medical center of Philadelphia University. The implemented system has the following features; - Its functionality is similar to the normal monitoring systems used in the Intensive Care Units (ICU) at hospitals. - It can be used as a portable device connected with patient mobile through Bluetooth communication module. - The same device can be used as a home device connected to the internet. In this case, extra test can be achieved by the device, such as Glucose, Uric Acid, Cholesterol, and others. - It can be used to provide a patient with medical advice according to the real-time acquired physiological data. - Real time measuring for patient state is required in order to detect issues and solve them before disaster occurrence. - Obtained results from real tests encourage us at Philadelphia University-Jordan to go ahead for further development and possibility of marketing in the near future.

REFERENCES

[1] Global Challenges for Humanity available at http://www. millennium project. org/millennium/challenges.html

[2] A Right to Health available at http://www. who.int/ mediacentre/factsheets.

[3] Bourouis, A., Feham, M., and Bouchachia, A.(2011), " Ubiquitous Mobile Health Monitoring System for Elderly (UMHMSE)", International Journal of Computer Science and Information Technology, Vol.2, No. 3, June, pp. 74-82.

[4] Ospino, M.R.; Ariza, L.C.; Rojas, J.G., (2012),"Mobile system for monitoring measurements in hypertensive patients", in the proceedings of the IEEE Colombian Communication conference, May 16-18, CA, pp. 1-6

[5]. Saly J. 2000. Neonatal and Pediatric Pulse Oximetry. Respiratory Care 286-289.

[6]. C. Otto, Milenkovic, A., Sanders, C., Jovanov, E.,"System architecture of a wireless body area sensor network for ubiquitous health monitoring," Journal of Mobile Multimedia, vol. 1, pp. 07-326, 2004.

[7]. Kazushige Ouchi, Takuji Suzuki, and Miwako Doi, "Lifeminder: A wearable healthcare support system with timely instruction based on the user's context - Advanced Motion Control," 8th IEEE International Workshop on AMC, 2004.

[8]. D.Malan, T.R.F.Fulford-Jones, M.Welsh,S.Moulton, CodeBlue: an ad-hoc sensor network infrastructure for emergency medical care, in: Proceedings of the Mobi-Sys 2004 Workshop on Applications of MobileEmbedded Systems (WAMES2004), Boston,MA, June,2004, pp.12–14

[9]. C. J. Kaufman, Rocky Mountain Research Lab., Boulder, CO, private communication, May 1995.

[10]. A. Pantelopoulos, & N. G. Bourbakis, "A Survey on Wearable Sensor-Based Systems for Health Monitoring and Prognosis", IEEE Transactions on Systems, Man, and Cybernetics, Part C: Applications and Reviews, Vol. 40, No.1, January 2010, pp: 1-12.

[11]. S. Mukherjee, K. Dolui, & S. K. Datta, "Patient health management system using e-health monitoring architecture", IEEE International Conference on Advance Computing (IACC), 2014, pp: 400 – 405

[12]. D. W. Kumar, "Healthcare Monitoring System Using Wireless Sensor Network", Intr. Journal of Advanced Networking and Applications, Vol.4, No.1, 2012, pp:1497-1500.

[13]. Pei-Cheng Hii, & Wan-Young Chung, "A Comprehensive Ubiquitous Healthcare Solution on an Android Mobile Device", Sensors, Vol.11, No.7, 2011, pp: 6799-6815.