Journal of Engineering Sciences
Vol 10, Issue 12, Dec /2019
ISSN NO:0377-9254

DESIGN AND FABRICATION OF MULTI SPINDLE DRILL MACHINE

K.SUBBARAYUDU[1] V. MADHU SUDHAN REDDY[2]

[1] M.TECH SCHOLAR, [2] ASSISTANT PROFESSOR
MECHANICAL DEPARTMENT
JAWAHARLAL NEHRU TECHNOLOGICAL UNIVERSITY ANANTAPUR (JNTU) COLLEGE OF ENGINEERING (CEP), PULIVENDULA

Abstract - The challenge of developing new machining industries and company is mainly focused on the achieving of best quality, time saving operation for increasing the of production, less removal of materials of cutting tools, hence rising the performance of the instrument. Now a day challenge of market, manufacturers and giving better performance are compelled to be more responsive to the customer's demands regarding more quality, specific quantity, minimum cost, and within time. Productivity can be increased by decreasing the overall machining time and combining the machining operations etc. The better direction to increase the production rate (productivity) along with quality and quantity is by use of special type of modifying machine. The Productivity and performance of the available or existing drilling machine will be increased by manufacturing, designing and Fabricating the newly type of Multiple Spindle Drilling Head.

Key words: Multi-spindle drilling attachment, Productivity, Accuracy, Design, Construction and Manufacturing

1. INTRODUCTION

Multiple-spindle drilling machines are used for increasing the mass production rate and saving of important time which are required for producing the holes with help of drill, huge time minimise where large samples of products or jobs having number of holes are to be drilled. Multi-spindle head machines are used in mechanical related factory in order to rising the productivity of machining processes. It is commonly used to drill holes for different pitch circle diameters. The centre distance between the spindles can be managed in any position as per the requirement of the various product. For keeping the centre distance between the drill spindles variable, they are connected to the main spindle by an Adjustable Transmission System (ATS). Now a day in market the customer requirement and demand the product should be in greater quality, right quantity, less cost, & at right time. Therefore, it is essential to improve productivity as well as quality of the jobs. The only way to achieve this is by using multi spindle drilling head. Designing of SPM is decided upon the principles of minimization of cost, improved productivity and high safety etc.

Problem Identification

1) The equipment is drive on electricity and required large power.
2) When various attachments are attached to machine so cost is high and machine construction is heavy. So, yet there no other machine developed which consider cutting and drilling processes in one set up.

In the previous drilling instrument only one workpiece can be drilled at a time. To increase the productivity, a special purpose equipment is required which drill the holes large than one at a time. Todays, the customer demands the product of right quality, right quantity, and right cost & at right time. Therefore, it is necessary to

improve productivity as well as quality**.** This is development and fabrication of multi-spindle drilling machine by using varying the Centre distance.

Methods of Multi spindle

a) Movable Multi-Spindle Drilling Head: In this method the center distance between drilling spindle can be increased according to requirement.

b) Fixed Multi-Spindle Drilling Head: In this process center distance cannot varies from its mean position.

Features of both the type multi spindle drilling head are:

1) With the help of multi-spindle drilling heads, improving the productivity and time is minimized for multiple hole production.

2) Multi-spindle drilling giving the positional accuracy and very good precision.

2. LITERATURE REVIEW

Prof. P. R. Sawant [1] et.al developed machine which hasmain objective was to drilling and tapping of TATAcylinder block which has 8 drills in which 7 holes of Ø6.75mm and one of Ø 12mm also linear tapping operation ofØ12mm and angular tapping operation of Ø5.1mm. It savestime for loading and unloading due to use of hydraulicclamping and increases production rate, less rejection ofwork due to automatic control.

\Prof. Chukwumuanya [2] et.al investigated Designand develop multiple spindle drilling head for massproduction of Peugeot 504 automobile brake drum. In thisdesign they developed multi-spindle drilling head fordrilling 6 holes at a time, in which 4 holes of Ø14.5mm and2 holes of Ø8.5mm. They analysis the various gear forcestheoretically. It conclude that msdh increases productionrate as compare to individual drilling operation.

Prof. M.B. Bankar [3] et.al Studied Improvement indesign and manufacturing of multiple spindle drillingattachment, in which they uses planetary gear system fordrilling operation. This case study they briefly givesinformation about designing drilling attachment from motorselection to its gear box. This study concluded that Multi-spindle drilling attachment increase productivity, reducescycle of operation and perform drilling operation moreaccurately.

Prof. Bajirao H. NangarePatil [4] et.al StudiedDesign and development of gear box for multi-spindledrilling machine. This case study drilling of 26 holes ofvarious sizes, are carried out on cylinder block. The sizes ofdrill are and nos. as Ø5 mm = 12 nos., Ø6 mm = 4 nos.,Ø14.4 mm = 10.They also use Auto-Cad software for designof gear box, various parts and assembly of machine. Thisstudy conclude that due to use of spur gear noise reduction,reduction in cycle time, increases production rate and alsoholes are drilled with required accuracy and tolerances aremaintained.

M. Narasimha [5] et.al. Studied Design ofadjustable multi-spindle attachment in this case study theydesign attachment for machining T-slots in a bolster plate.They studied milling of three T-slots in a single pass isdone. The range of T-slot spacing for the present design is40 mm – 160 mm. This study conclude that due use of thisattachment milling three T-slots in single pass is done ascompared to individual milling due to this production rate isincreased.

Pratik Parsania [6] et.al Studied on Design ofhydraulic power pack for Multi spindle drilling SPM. In thiscase study it is shown that how effectively SPM work ascompare to conventional drilling machine. In conventionaldrilling machine it takes 8 hours for drilling 2400 pieces perday and by using it takes only 3.33hours for drilling

2400pieces per day hence it is largely affects the production rate.It also beneficial as compare to use of CNC machinesbecause of the cost of CNC machines so high. Hence thiscase study concludes that use of SPM is most important insmall scale industries.

Prof. K.G.Sontakke [7] et.al Studied Design andanalysis of drilling cum riveting machine they developdrilling machine cum with riveting machine to reduceoperation time and transportation time for riveting purpose.This machine has orbital riveting machine for rivetingpurpose. This study concludes that using drilling cumriveting machine increases productivity.

3. METHODOLOGY

Proposed work started with the problem identification in industrial process of manufacturing of different type of saddle clamp. By collecting available information and specification further solution finding approached. It is found that Quality and productivity play important role in today's manufacturing market. Multi-spindle drilling head is the cheapest and most efficient way to improve the productivity.

4. INTRODUCTION TO CREO

PTC Creo, previously known as Pro/E is parametric,3D CAD/CAM/CAE solution created by parametric technology corporation (PTC). It is used by many industries for design and manufacturing applications. Developed by Dr.Samules P. Geisberg in the mid 1980s, as ruled based constraints 3D CAD modeling system. Special importance is given to an unitary database management system. It has facility functions such as sketch, part, assembly, drawing, manufacturing processing, mechanism simulation and finite element analysis and automatic measurement. Two-dimensional CAD software has disadvantage like cannot have all product information, stability, validity and general parametric modeling of complex models and losing information. This disadvantage is overcome by PTC in Pro/E. China is widely using the Pro/E for the electronics, mold design, household application and toys etc. design. Lot of publication is done on parametric modeling and design from Chinese authors. In parametric design, modification of certain parts of model will automatically does the modification of its related parts/features. In case of new product development, engineers just sketches out a contour of model without an settings. Final shapes can be obtained by relating the parameters of models with design calculation and optimization in relations. Thus user has saving time for modifications of models . The biggest challenge is to start thinking parametrically. You must constantly ask "How could this change, and what could change with it?", and then learn to create parametric relationships that can make adjustments automatically when the changes occur.

5. DESIGN OF MULTISPINDLE DRILL MACHINE BY USING CREO

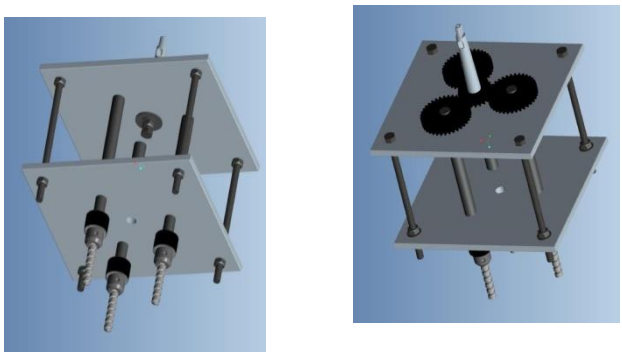

Bottom view top view of multi spindle

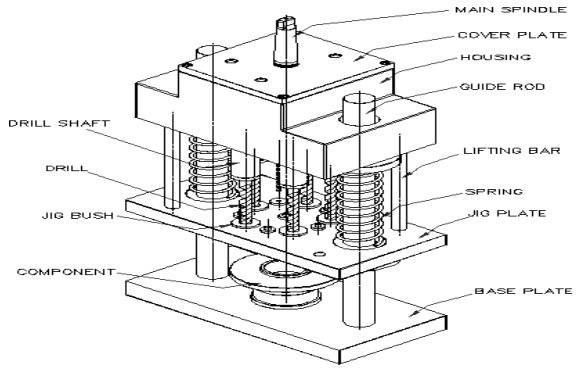

Multispindle drilling head

By using this multispindle drilling head 5 holes of diameter 15.24/15.31mm and one hole diameter 5.0 mm (for M6x1 tapping) drill at a time. Drive is given by motion to main spindle, which drives planetary gear train fitted in the housing, then drill shafts rotates as per the gear ratio.

5. DESCRIPTION OF EQUIPMENT

5.1LEADSCREW:

A lead screw also known as a power screw or translation screw, is a screw used as a linkage in a machine, to translate turning motion into linear motion. Because of the large area of sliding contact between their male and female members, screw threads have larger frictional energy losses compared to other linkages. They are not typically used to carry high power, but more for intermittent use in low power actuator and positioned mechanisms. Common applications are linear actuators, machine slides (such as in machine tools), vises, presses, and jacks.

5.2 DRILL CHUCK:

A *drill chuck* is a specialised self-centering, three-jaw chuck, usually with capacity of 0.5 in (13 mm) or less and rarely greater than 1 in (25 mm), used to hold drill bits or other rotary tools. This type of chuck is used on tools ranging from professional equipment to inexpensive hand and power drills for domestic use; it is the type a person who does not normally work with machine tools is most likely to be familiar with.

5.3 BALL BEARING:

A ball bearing is a type of rolling-element bearing that uses balls to maintain the separation between the bearing races. The purpose of a ball bearing is to reduce rotational friction and support radial and axial loads. It achieves this by using at least two races to contain the balls and transmit the loads through the balls. In most applications, one race is stationary and the other is attached to the rotating assembly (e.g., a hub or shaft). As one of the bearing races rotates it causes the balls to rotate as well. Because the balls are rolling they have a much lower coefficient of friction than if two flat surfaces were sliding against each other.

5.4 PULLEY:

A grooved pulley wheel like that used for ropes is called a sheave. A single sheave mounted in a block and fixed in place simply changes the direction of force exerted on the rope passing over it. If the end of the rope that ordinarily would attach to the load is passed around a second, unfixed pulley and back to the fixed pulley, a load attached to the free pulley can be raised with half the effort, or with a mechanical advantage of 2. Thus arranged, the device is called a block and tackle. The number of pulley wheels mounted in the fixed and free blocks can be increased indefinitely to get a higher and higher mechanical advantage, the mechanical advantage equaling the number of strands running to the free pulley. Therefore if the rope is run over the first fixed pulley wheel, around the free pulley, over a second pulley wheel in the fixed block, and back to the free block, the mechanical advantage is 3. A 300-lb load can be raised by a pull of 100 lb on the free end of the rope. To raise the load 10 ft, however, the free end of the rope must be pulled 30 ft.

5.5 THREE-PHASE ELECTRIC MOTOR:
Three-phase electric power is a common method of alternating-current electric power generation, transmission, and distribution. It is a type of polyphase system and is the most common method used by electrical grids worldwide to transfer power. It is also used to power large motors and other heavy loads. A three-phase system is usually more economical than an equivalent single-phase or two-phase system at the same voltage because it uses less conductor material to transmit electrical power. The three-phase system was independently invented by Galileo Ferraris, Mikhail Dolivo-Dobrovolsky and Nikola Tesla in the late 1880s.

5.6 V-BELT:
VEE belts (also known as V-belt or wedge rope) solved the slippage and alignment problem. It is now the basic belt for power transmission. They provide the best combination of traction, speed of movement, load of the bearings, and long service life. They are generally endless, and their general cross-section shape is trapezoidal (hence the name "V"). The "V" shape of the belt tracks in a mating groove in the pulley(or sheave), with the result that the belt cannot slip off. The belt also tends to wedge into the groove as the load increases—the greater the load, the greater the wedging action—improving torque transmission and making the V-belt an effective solution, needing less width and tension than flat belts. V-belts trump flat belts with their small center distances and high reduction ratios. The preferred center distance is larger than the largest pulley diameter, but less than three times the sum of both pulleys. Optimal speed range is 1,000–7,000 ft/min (300–2,130 m/min). V-belts need larger pulleys for their larger thickness than flat belts.

COST ESTIMATION

S.no	Component	Quantity	Price (rupees)
1.	Lead screw	1	1200
2.	A.C motor	1	4200
3.	Drill chuck	3	2200
4.	Drill bit	3	150
5.	Drill Pulley	2	400
6.	Motor pulley	1	500
7.	Belt	1	420
8.	Base	1	1800
9.	Other material	-	1000

TOTAL COST 11,870

CONCLUSION

We did our project successfully by using the above reference and guidance. We have fabricated the “MULTI SPINDLE DRILLING MACHINE” and it is an impressing task in the field of small scale industries.in this project we had eliminated the human effort that is wasted.Our product the “MULTI SPINDLE DRILLING MACHINE” is an economical and also useful small scale machine.

REFERENCES

1) Bajirao H. et.al., “Design and Development of Gearbox for Multi-Spindle Drilling Machine (SPM)”, International journal of engineering research & technology (IJERT) Volume 2, Issue 5, ISSN: 2278-0181, May-2013.

2) Prof. Ms.A.A.Shingavi. et.al., “Design of multiple spindle drilling machine”, International journal of research in advent technology (E-ISSN: 2321-9637) Special Issue 1st International conference on advent trends in engineering, science and technology (ICATEST 2015), 08 March 2015.

3)Sanjay Kumar, Godse Rahul.et.al., "Design and development of Twin Drill Head Machine and Drilling Depth Control “, International Journal of Innovative Research in Science, Engineering and Technology, Vol. 4, Issue 5, May 2015.

4)Dr.C.S.Shah.et.al.,"Machine Design", Seventeenth Edition, Charotar Publishing House Pvt.LTD, Gujarat, 2009.

5)Prof.V.J.Khot.et.al.," Design and development of multiple spindle drilling head”, Second International Conference on Emerging Trends in Engineering (SICETE).

6) V.B.Bhandari, "Design of machine elements ", Third edition, McGraw Hill Education (India) Private Limited, New Delhi, 2010

AUTHOR DETAILS

[1] M.TECH FROM JAWAHARLAL NEHRU TECHNOLOGICAL UNIVERSITY ANANTAPUR (JNTU) COLLEGE OF ENGINEERING (CEP), PULIVENDULA

[2] REDDY WORKING AS ASSISTANT PROFESSOR OF MECHANICAL DEPARTMENT FROM JAWAHARLAL NEHRU TECHNOLOGICAL UNIVERSITY ANANTAPUR (JNTU) COLLEGE OF ENGINEERING (CEP), PULIVENDULA