ISSN NO:0377-9254

DEVELOPMENT OF SMART FLOOD MONITORING SYSTEM USING ULTRASONIC SENSOR WITH BLYNK APPLICATION

[1]GUMMA SREE KARUN, [2]BYRENI SUDHARSHAN, [3]R RAMA RAO, [4]B L MOHAN REDDY
[1234]UG STUDENT
DEPARTMENT OF ECE
DR.K.V.SUBBA REDDY INSTITUTE OF TECHNOLOGY, KURNOOL

ABSTRACT:

This paper presents the development of a smart flood monitoring system using Blynk platform as a medium of data transmission. This system is based on two Node MCU development board integrated using Blynk application (IOS or android). The first Node MCU is placed at the flood area, whilst the second NodeMCU acts as the control unit. Transmitter unit consisting of first NodeMCU, an ultrasonic sensor will detect the water level during flooding and display it on the LCD. Then, the data detected from the ultrasonic sensors will be sent to the Blynk application via wireless connection. The data are instantly collected and stored in a dedicated database for recording purposes. In order to alert the person in charge of the control unit, the data then will be send to second NodeMCU via Blynk Bridge to trigger the buzzer and the LED. Based on the findings, the access to the system between first NodeMCU and second NodeMCU can be made within less or more than 50 meters. In the findings, it revealed that the system works well when the data sensed by the ultrasonic sensor display on the Blynk application and both buzzer and LED are functioning. The results obtained shown that the system is capable to tackle the flood problem in the affected area.

I. INTRODUCTION:

In Many Countries, the flood is one of the frequent disasters that occurred in the monsoon season especially at the end of each year. The flood monitoring and detection system are important to minimize flood damage costs because the cost of damaged caused by the floods is correlated closely with the period of warning given before the flood event occurred. Because of this, the purpose of this project is to design and develop a flood monitoring and detection system using the Internet of Thing (IoT).

The main objective of the proposed system is to provide information on the current water level in the particular area, such as river and drain. When, the water level increase beyond the critical level, the system sends the alert notification to the user. The system will give alert and Danger level (Red LED). The system consists of an ultrasonic sensor, Node Mcu as the system microcontroller, Wi-Fi module, and Blynk Application. Wi-Fi module is used to established connection to the internet. The Node Mcu must be set and connected to the Wi-Fi. The current water level is pushed to the Blynk Application and can be viewed in a graph. This Project shows the system design of the proposed system with Wi-Fi module. As an alternative, for an area without a Wi-Fi connection, GSM module can be integrated with the system, and the current water level can be sent to the user via SMS.

II. LITERATURE REVIEW

A reliable computational model which could fight with the flood in developing and poor countries is our main concern. We are describing different research work that are deploying wireless sensor network (WSN).There are different models, the different energy efficiency models, different networking arrangement of wireless sensor networks. These motivate us in preparing a most efficient model for predicting and preventing flood.

Flood Monitoring system presents a forecasting model designed using WSNs (Wireless Sensor Networks).This model helps to predict flood in rivers using simple and fast calculations to provide real-time results and save the lives of people who may be affected by the flood by ringing a alarm. The flow of work can be shown by them as in the flow diagram given below. The process flow diagram of Here the author used multiple variable robust linear regression which is easy to understand and simple and cost effective in implementation, is speed efficient. It has

low resources utilization and yet provides real time predictions with reliable accuracy, thus having features which are desirable in any real world algorithm. The model is independent of the number of parameters, i.e. any kind and any number of parameters may be added or removed based on the on-site requirements. The rise in water level is represented by using a polynomial from which the exceeding of the flood line in the near future can be determined. In this paper a time multiplier function is used only to decide the time interval between two successive readings. The central node is mentioned in this model but it is not taken into account. This model is only predicting the flooding situation and warning people about flood by ringing the alarm but it has no role in preventing the flooding situation. In this paper they have kept the efficient energy consumption part for future work. Honduras.

III. HARDWARE REQUIREMENT:

1. POWER SUPPLY
2. NODEMCU
3. ULTRASONIC SENSOR
4. LCD
6. LED
7. BUZZER

POWERSUPPLY:

The power supplies are designed to convert high voltage AC mains electricity to a suitable low voltage supply for electronic circuits and other devices. A power supply can by broken down into a series of blocks, each of which performs a particular function. A d.c power supply which maintains the output voltage constant irrespective of a.c mains fluctuations or load variations is known as "Regulated D.C Power Supply".

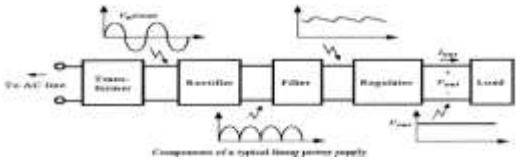

NODEMCU

NodeMCU is an open source LUA based firmware developed for ESP8266 wifi chip. By exploring functionality with ESP8266 chip, NodeMCU firmware comes with ESP8266 Development board/kit i.e. NodeMCU Development board. Since NodeMCU is open source platform, their hardware design is open for edit/modify/build. NodeMCU Dev Kit/board consist of ESP8266 wifi enabled chip. The ESP8266 is a low-cost_Wi-Fi chip developed by Expressive Systems with TCP/IP protocol.

The ESP8266 is the name of a micro controller designed by Expressive Systems. The ESP8266 itself is a self-contained Wi-Fi networking solution offering as a bridge from existing micro controller to Wi-Fi and is also capable of running self-contained applications. This module comes with a built in USB connector and a rich assortment of pin-outs. With a micro USB cable, you can connect NodeMCU devkit to your laptop and flash it without any trouble, just like Arduino. It is also immediately breadboard friendly.

For more information about ESP8266, you can refer ESP8266 Wi-Fi Module. NodeMCU Dev Kit has Arduino like Analog (i.e. A0) and Digital (D0-D8) pins on its board.It supports serial communication protocols i.e. UART, SPI, I2C etc. Using such serial protocols we can connect it with serial devices like I2C enabled LCD display, Magnetometer HMC5883, MPU-6050 Gyro meter + Accelerometer, RTC chips, GPS modules, touch screen displays, SD cards etc.

NodeMCU Development board is featured with wifi capability, analog pin, digital pins and serial communication protocols. To get start with using NodeMCU for IoT applications first we need to know about how to write/download NodeMCU firmware in NodeMCU Development Boards. And before that where this NodeMCU firmware will get as per our requirement. There is online NodeMCU custom builds available using which we can easily get our custom NodeMCU firmware as per our requirement.

ULTRA SONIC SENSOR

The transmitter emits a 8 bursts of an directional 40KHz ultrasonic wave when triggered and starts a timer. Ultrasonic pulses travel outward until they encounter an object, The object causes the the wave to be reflected back towards the unit. The ultrasonic receiver would detect the reflected wave and stop the stop timer. The velocity of the ultrasonic burst is 340m/sec. in air. Based on the number of counts by the

timer, the distance can be calculated between the object and transmitter The TRD Measurement formula is expressed as: D = C X T which is know as the time/rate/distance measurement formula where D is the measured distance, and R is the propagation velocity (Rate) in air (speed of sound) and T represents time. In this application T is devided by 2 as T is double the time value from transmitter to object back to receiver.

LCD DISPLAY:

A model described here is for its low price and great possibilities most frequently used in practice. It is based on the HD44780 microcontroller (Hitachi) and can display messages in two lines with 16 characters each. It displays all the alphabets, Greek letters, punctuation marks, mathematical symbols etc. In addition, it is possible to display symbols that user makes up on its own. Automatic shifting message on display (shift left and right), appearance of the pointer, backlight etc. are considered as useful characteristics.

BUZZER:

A Buzzer or Beeper is an audio signaling device, which may be mechanical, electromechanical, or piezoelectric .Typical uses of buzzers and beepers include alarm devices, timers, and confirmation of user input such as a mouse click or keystroke. The vibrating disk in a magnetic buzzer is attracted to the pole by the magnetic field. When an oscillating signal is moved through the coil, it produces a fluctuating magnetic field which vibrates the disk at a frequency equal to that of the drive signal.The buzzer consists of an outside case with two pins to attach it to power and ground. Inside is a piezo element, which consists of a central ceramic disc surrounded by a metal (often bronze)vibration disc. Changing the This then causes the surrounding disc to vibrate. That's the sound that you hear.

Fig: Buzzer

LED:

A light-emitting diode (LED) is a two-lead semiconductor light source. It is a p–n junction diode that emits light when activated. When a suitable voltage is applied to the leads, electrons are able to recombine with electron holes within the device, releasing energy in the form of photons. This effect is called electroluminescence, and the color of the light (corresponding to the energy of the photon) is determined by the energy band gap of the semiconductor. LEDs are typically small (less than 1 mm^2) and integrated optical components may be used to shape the radiation pattern.

SOFTWARE REQUIREMENTS:

- **ARDUINO IDE**

The Arduino Integrated Development Environment (IDE) is a cross-platform application (for Windows, macOS, Linux) that is written in functions from C and C++. It is used to write and upload programs to Arduino compatible boards, but also, with the help of 3rd party cores, other vendor development boards. First, the Arduino compiler/IDE accepts C and C++ as-is. In fact many of the libraries are written in C++. Much of the underlying system is not object oriented,

but it could be. Thus, "The arduino language" is C++ or C. The same Environment is used for the NodeMCU

PROJECT DESCRIPTION:

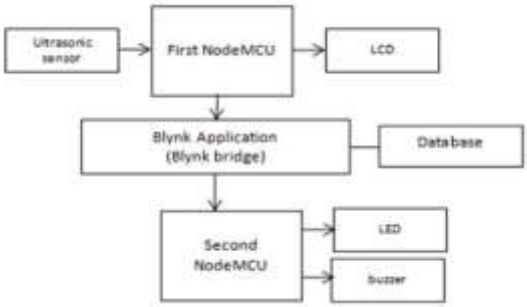

WORKING:

This system is based on two NodeMCU development board integrated using Blynk application (IOS or android). The first NodeMCU is placed at the flood area, whilst the second NodeMCU acts as the control unit. Transmitter unit consisting of first NodeMCU, an ultrasonic sensor will detect the water level during flooding and display it on the LCD. Then, the data detected from the ultrasonic sensors will be sent to the Blynk application via wireless connection. The data are instantly collected and stored in a dedicated database for recording purposes. In order to alert the person in charge of the control unit, the data then will be send to second NodeMCU via Blynk Bridge to trigger the buzzer and the LED. Based on the findings, the access to the system between first NodeMCU and second NodeMCU can be made within less or more than 50 meters. In the findings, it revealed that the system works well when the data sensed by the ultrasonic sensor display on the Blynk application and both buzzer and LED are functioning.

IV. CONCLUSION

The proposed model is an efficient model which helps in preventing flood due to sudden flush out of excess water at barrage at a time. In this model the water at barrage is flushed from the barrage in a controlled manner so that flood in the plain area will not occur. The advantages of this model are that we are using minimum number of parameter. We are also including the less battery energy consumption method. This model is a cost effective model. Hence this can be deployed by developing and poor country to fight back with flood.

REFERENCES

[1] Victor Seal, Arnab Raha, Shovan Maity, Souvik Kr Mitra, Amitava Mukherjee and Mrinal Kanti Naskar. A simple flood forecasting scheme using wireless sensor networks. International Journal of Ad hoc, Sensor & Ubiquitous Computing (IJASUC) Vol.3, No.1, February 2012

[2] Basha, Elizabeth, and Daniela Rus. "Design of early warning flood detection systems for developing countries." Information and Communication Technologies and Development, 2007. ICTD 2007. International Conference on. IEEE, 2007.

[3] Basha, Elizabeth A., Sai Ravela, and Daniela Rus. "Model-based monitoring for early warning flood detection." Proceedings of the 6th ACM conference on Embedded network sensor systems. ACM, 5-7 November 2008.

[4] Danny Hughes, Phil Greenwood, Gordon Blair, Geoff Coulson, Florian Pappenberger, Paul Smith and Keith Beven. An Intelligent and Adaptable Grid-based Flood Monitoring and Warning System (DRAFT).UK eScience All Hands Meeting 5th, 2006

[5] Vinicio Anthone, Satoru Oishi. A wireless mesh sensor network framework for river flood detection

which can be used as an emergency communications network in case of disaster. 11thInternational Conference on Hydroinformatics HIC 2014

[6] Jirapon Sunkpho and Chaiwat Ootamakorn. Songklanakarin J. Sci. Real-time flood monitoring and warning system. Technol.33 (2), 227-235, Mar. - Apr. 2011

[7] F. Shebli, I. Dayoub and J.M. Rouvaen.Minimizing energy consumption within wireless sensors networks. Ubiquitous Computing and Communication Journal ,2007

[8] M.N.Halgamuge, M. Zukerman, and K. Ramamohanarao, H.L.vu. An estimation of sensor energy consumption. Progress in Electromagnetics Research B, Vol. 12, 259–295, 2009

[9] Naveed Ahmad, Mureed Hussain, Naveed Riaz, Fazli Subhani, Sajjad Haider, Khurram.S.Alamgir, Fahad Shinwari. Flood Prediction and Disaster Risk Analysis using GIS based Wireless Sensor Networks, A Review.Journal of Basic and Applied Scientific Research. ISSN 2090-4304, 2013

[10] Sultanullah Jadoon, Salman Faiz Solehria, Mubashir Qayum1. A Proposed Least Cost Framework of Irrigation Control System Based on Sensor Network for Efficient Water Management in Pakistan. International Journal of Basic & Applied Sciences IJBAS-IJENS Vol: 11 No: 02. April, 2011.