Journal of Engineering Sciences
Vol 10, Issue 8, Aug /2019
ISSN NO:0377-9254

SMART STREET LAMP BASED ON FOG COMPUTING FOR SMARTER CITIES USING ARDUINO

#1BHAGYA LAKSHMI, #2B VANI
1,2Assistant Professor
DEPT OF ECE
Dr.K V SUBBA REDDY INSTITUTE OF TECHNOLOGY, KURNOOL

ABSTRACT:

Both safety and energy conservation are very important advantages of smart cities. Namely, the city street lamp is correlated with both safety and energy conservation. Therefore, street lamp is an indispensable part of the smart cities. However, current street lamps have lack of smart characteristics, which increases both danger and energy consumption.

In order to address these problems, a smart street lamp (SSL) based on fog computing for smarter cities is proposed in this paper.

The advantages of the proposed SSL are: 1) fine management, because every street lamp can be operated independently using IOT technology. 2) dynamic brightness adjustment , all street lamps can be adjusted dynamically. 3) autonomous alarm on abnormal states, each street lamp can report the abnormal status independently, such as broken, stolen, and so on. The experimental results showed that proposed SSL can improve energy efficiency and reduce danger. And the proposed system to developed by GSM,IOT technology and Arduino Uno .

I. INTRODUCTION

THe main aim of the smart city relates to safer, more convenient, and more comfortable operation, and better energy conservation. Therefore, make an urban infrastructure be smarter is necessary for promoting the smart cities. The street lamp as an essential part of urban infrastructure in the city, closely relates to the safety and energy conservation. Nowadays, it is impossible to imagine how the city would look like without street lamps. However, it is easy to predict that in that case the danger from traffic, robbery, and stealing would increase seriously. Moreover, it is necessary to optimize the current street lamp management because of its high energy consumption on daily basis.

Presently, the street lamps mainly adopt manual management or light perception control, which both have certain disadvantages: 1) Long maintenance period. Both manual management and light perception control adopt manual patrol to check broken street lamps. Therefore, the maintenance period is too long, especially for the suburban street lamps, it can be even longer than few months. However, the danger increases just after the street lamps are broken, thus there could happen more traffic accidents, more robbery and stealing. 2) Hard fine grain control. It is obvious the manual management is not smart enough, and it can be difficulty controlled in real time. Moreover, in order to simplify manual management, one switch is used to control many street lamps simultaneously. For the light perception control, the flexibility is almost limited. Remote and real time controls are not part of current management systems. 3) High energy consumption. Current street lamps have only two states, off and on. Moreover, they cannot adjust their brightness. Therefore, they consume unnecessary energy. Sometimes, the street lamps can be dim to reduce energy consumption. 4) Easy stolen. There is no effective method to prevent stealing of street lamps. There are a large number of street lamps so it is particularly impossible to control all of them all the time. In order to avoid stealing, the effective way is to make street lamps have self-supervise ability. In order to optimize the above-mentioned disadvantages to establish the smart cities, a new generation of street lamps has to improve lamp performance by introducing the following features: 1) Reduce maintenance period. Maintenance period is one of the most important parameters in smart cities. Therefore, the maintenance period must be reduced as much as possible. There must be a mechanism to check broken lamps in real time. 2) Satisfy fine grain control. Fine grain control includes few parts: first, every street lamp needs a unique identification to distinguish each other; second, every street lamp should be controlled independently; third, all street lamps should be controlled all the time; fourth, every street lamp has to be able to adjust its brightness according to current demands. 3) Decrease energy consumption. The brighter the street lamp lights up, the more energy is consumed. However, by using a dynamical light intensity adjustment according to current demands, energy consumption will decrease. 4) Autonomous alarm to avoid stealing. Every street lamp needs to have a self-protection ability. When it is stolen, it should autonomously send the alarm. In this way, the street lamp stealing can be avoided.

In this, we propose a smart street lamp (SSL) based on fog computing for smarter cities to meet the above four abilities. The proposed SSL consists of three main parts: an intelligent sensing street lamp, which can adjust lamp brightness, an autonomous alarm which reports about abnormal behavior; an efficient network, which is used for real-time communication between managers and massive street lamps; and lastly, a flexible management platform, which is easy and highly automated. We verified the proposed SSL by its application in Xiasha District of Hangzhou, China, and very good results were obtained. The average maintenance period, which denotes the time period from the moment the street lamp is broken to the moment that is noticed by the server, is less than 20 minutes. Moreover, the proposed SSL can reduce human resources avoiding an inefficient manual patrol. The main contributions of the proposed SSL are: 1) The hybrid network is adopted, the Narrow Band Internet of Things (NB-IoT) is used for real-time communication between server and massive street lamps, and the Internet is used for real-time communication between managers and server; 2) A flexible management platform is implemented, and it notifies the managers about broken street lamps at real time and automatically dispatches the maintenance staff to repair broken street lamps; 3) The states of all street lamps can be traced and adjusted in real time.

II. LITERATURE REVIEW

Some intelligent street lamps have been proposed based on many communication technologies, such as ZigBee [3], LPWA [6], GSM [5], and so on [22, 23]. moreover, there are many other communication technologies, such as Bluetooth [2], UMTS/LTE [4], Wi-Fi [1], and so on. Each of these communication technologies has its own characteristic. The Low-Power Wide-Area Network (LPWAN) or LowPower Wide-Area (LPWA) is a type of wireless communications for wide-area networks. Therefore, the LPWA is designed to provide long-range communication with a low transmission rate of 0.3 kb/s up to 50 kb/s per channel. The LPWAN has the potential to revolutionize the Internet of Things by providing a reliable and low-cost solution for communication between embedded devices. LoRaWAN [20] is one of the most successful technologies in the LPWAN space. A LoRaWAN gateway, covering a range of tens of kilometers and able to serve up to thousands of end devices, must be carefully dimensioned to meet the requirements of each use case. Thus, the combination of the number of end devices, the selected SFs, and the number of channels will determine if the LoRaWAN ALOHA-based access and the maximum duty cycle regulation fit each use case. However, the deterministic monitoring and realtime operation cannot be guaranteed with the current LoRaWAN state of the art. The Universal Mobile Telecommunications System (UMTS) is the third generation mobile cellular system based on the GSM standard. The UMTS is developed and maintained by the 3rd Generation Partnership Project (3GPP), and it is a component of the International Telecommunications Union IMT-2000 standard set. Moreover, both UMTS and CDMA2000 are the standard sets for networks based on the competing CDMAOne technology. The UMTS works at 2100 MHz (downlink - 2100 MHz, uplink - 1900 MHz) in Europe and most of Asia. Nowadays, it is also adopted in North America. The 2G (PCS) services work at 1900 MHz, and satellite communications work at 2100 MHz. The Regulators have freed up 2100- MHz range for 3G downlink, and some frequency ranges about 1700 MHz for its uplink. The characteristics of UMTS are high transmission rate and wide coverage. However, the characteristics of GSM are middle transmission rate and wide coverage. On the other hand, Bluetooth is based on IEEE 802.15.1 standard, and ZigBee is based on IEEE 802.15.4 standard. These are two protocol standards for short-coverage wireless communications. For instance, Bluetooth is intended for a cordless mouse, keyboard, and hands-free headset, and ZigBee is designed for reliable wirelessly networked monitoring and control systems. The main characteristics of both Bluetooth and ZigBee are low transmission rate and short coverage. The Wi-Fi (Wireless Fidelity) is commonly known as a wireless broadband or IEEE 802.11b standard. Moreover, WiFi is defined as an industry standard for wireless network communications. The IEEE 802.11b standard is an extension of IEEE 802.11 standard, with working frequency of 2.4 GHz and transmission rate of up to 11 Mbps. The Wi-Fi is a technology which can enable wireless connection of terminals such as mobile phone, pad, personal computers, and so on. The Wi-Fi improves the interoperability between unlimited network products adopting the IEEE 802.1 standard. The main characteristics of Wi-Fi are high transmission rate and short coverage. The characteristics of different wireless communication technologies [21] in terms of transmission rate and coverage are presented in Fig. 1. In order to connect everything and everyone, the 3GPP introduced a new radio access network technology (RAN) called the Narrow Band Internet of Things (NB-IoT) [7], which operates with a carrier at 200 kHz. The NB-IoT is designed to have a low cost, long battery life, and high coverage, and can be

used to connect a large number of devices [8]. Moreover, the NB-IoT is characterized by low power consumption, less complex transceiver, coverage enhancement, and low-cost radio chip [9-11]. The discontinuous reception (DRX) in NB-IoT can save power using a sleep mode based on periodic waking to send data. Moreover, numerous UEs can be supported by a single NB-IoT, even more than 100,000 UEs per NB-IoT channel. Therefore, billions of connections can be supported by NB-IoT through adding the additional carriers to the network [12-15]. The superiorities of NB-IoT over the other wireless communication technologies are presented.

III. DESIGN OF HARDWARE

This chapter briefly explains about the Hardware implementation of SSL: Smart Street Lamp based on Fog Computing for Smarter Cities . It discuss the circuit diagram of each module in detail.

3.1.ARDUINO UNO

The Arduino Uno is a microcontroller board based on the ATmega328 (datasheet). It has 14 digital input/output pins (of which 6 can be used as PWM outputs), 6 analog inputs, a 16 MHz ceramic resonator, a USB connection, a power jack, an ICSP header, and a reset button. It contains everything needed to support the microcontroller; simply connect it to a computer with a USB cable or power it with a AC-to-DC adapter or battery to get started.

The Uno differs from all preceding boards in that it does not use the FTDI USB-to-serial driver chip. Instead, it features the Atmega16U2 (Atmega8U2 up to version R2) programmed as a USB-to-serial converter. Uno board has a resistor pulling the 8U2 HWB line to ground, making it easier to put into DFU mode.Arduino board has the following new features:

- 1.0 pinout: added SDA and SCL pins that are near to the AREF pin and two other new pins placed near to the RESET pin, the IOREF that allow the shields to adapt to the voltage provided from the board. In future, shields will be compatible both with the board that use the AVR, which operate with 5V and with the Arduino Due that operate with 3.3V. The second one is a not connected pin, that is reserved for future purposes.
- Stronger RESET circuit.
- Atmega 16U2 replace the 8U2.

"Uno" means one in Italian and is named to mark the upcoming release of Arduino 1.0. The Uno and version 1.0 will be the reference versions of Arduino, moving forward. The Uno is the latest in a series of USB Arduino boards, and the reference model for the Arduino platform; for a comparison with previous versions, see the index of Arduino boards.

Fig: ARDUINO UNO

3.2. POWER SUPPLY

The power supplies are designed to convert high voltage AC mains electricity to a suitable low voltage supply for electronic circuits and other devices. A power supply can by broken down into a series of blocks, each of which performs a particular function. A d.c power supply which maintains the output voltage constant irrespective of a.c mains fluctuations or load variations is known as “Regulated D.C Power Supply”.

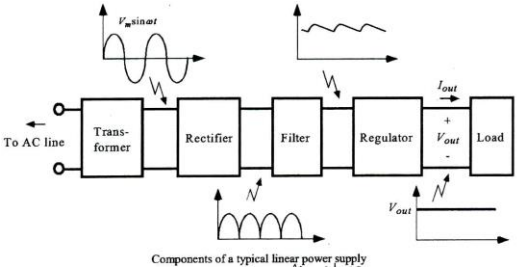

3.3 ESP8266 WIFI

The **ESP8266** is a low-cost Wi-Fi microchip with full TCP/IP stack and microcontroller capability produced by Shanghai-based Chinese manufacturer, Espressif Systems.[1]

The chip first came to the attention of western makers in August 2014 with the **ESP-01** module, made by a third-party manufacturer, Ai-Thinker. This small module allows microcontrollers to connect to a Wi-Fi network and make simple TCP/IP connections using Hayes-style commands. However, at the time there was almost no English-language documentation on the chip and the commands it accepted.[2] The very low price and the fact that there were very few external components on

the module which suggested that it could eventually be very inexpensive in volume, attracted many hackers to explore the module, chip, and the software on it, as well as to translate the Chinese documentation.[3]

The **ESP8285** is an ESP8266 with 1 MiB of built-in flash, allowing for single-chip devices capable of connecting to Wi-Fi.[4]

The successor to these microcontroller chips is the ESP32.

ESP8266

ESP-01 module by Ai-Thinker

Manufacturer	Espressif Systems
Type	32-bit microcontroller
CPU	@ 80 MHz (default) or 160 MHz
Memory	32 KiB instruction, 80 KiB user data
Input	16 GPIO pins
Power	3.3 V DC

3.4 RELAYS

We know that most of the high end industrial application devices have relays for their effective working. Relays are simple switches which are operated both electrically and mechanically. Relays consist of a n electromagnet and also a set of contacts. The switching mechanism is carried out with the help of the electromagnet. There are also other operating principles for its working. But they differ according to their applications. Most of the devices have the application of relays.

Why is a relay used?

The main operation of a relay comes in places where only a low-power signal can be used to control a circuit. It is also used in places where only one signal can be used to control a lot of circuits. The application of relays started during the invention of telephones. They played an important role in switching calls in telephone exchanges. They were also used in long distance telegraphy. They were used to switch the signal coming from one source to another destination.

Relay Design

There are only four main parts in a relay. They are

- Electromagnet
- Movable Armature
- Switch point contacts
- Spring

Relay Basics

The basics for all the relays are the same. Take a look at a 4 – pin relay shown below. There are two colours shown. The green colour represents the control circuit and the red colour represents the load circuit. A small control coil is connected onto the control circuit. A switch is connected to the load. This switch is controlled by the coil in the control circuit. Now let us take the different steps that occour in a relay.

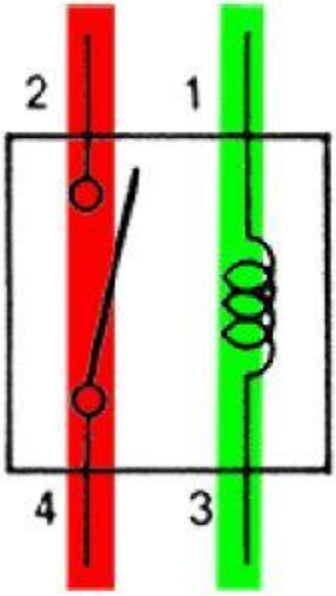

relay operation

3.5 LCD

Liquid Crystal Display also called as LCD is very helpful in providing user interface as well as for debugging purpose. The most commonly used Character based LCDs are based on Hitachi's HD44780 controller or other which are compatible with HD44580. The most commonly used LCDs found in the market today are 1 Line, 2 Line or 4 Line LCDs which have only 1 controller and support at most of 80 characters, whereas LCDs supporting

more than 80 characters make use of 2 HD44780 controllers

Pin Description

3.6 GPS

The Global Positioning System (GPS) is a space-based satellite navigation system that provides location and time information in all weather, anywhere on or near the Earth, where there is an unobstructed line of sight to four or more GPS satellites. It is maintained by the United States government and is freely accessible to anyone with a GPS receiver.

The GPS program provides critical capabilities to military, civil and commercial users around the world. In addition, GPS is the backbone for modernizing the global air traffic system.

The GPS project was developed in 1973 to overcome the limitations of previous navigation systems,[1] integrating ideas from several predecessors, including a number of classified engineering design studies from the 1960s. GPS was created and realized by the U.S. Department of Defense (DoD) and was originally run with 24 satellites. It became fully operational in 1994.

Advances in technology and new demands on the existing system have now led to efforts to modernize the GPS system and implement the next generation of GPS III satellites and Next Generation Operational Control System (OCX).[2] Announcements from the Vice President and the White House in 1998 initiated these changes. In 2000, U.S. Congress authorized the modernization effort, referred to as GPS III.

In addition to GPS, other systems are in use or under development. The Russian Global Navigation Satellite System (GLONASS) was in use by only the Russian military, until it was made fully available to civilians in 2007. There are also the planned European Union Galileo positioning system, Chinese Compass navigation system, and Indian Regional Navigational Satellite System.

Basic Components of GPS

A GPS receiver calculates its position by precisely timing the signals sent by GPS satellites high above the Earth. Each satellite continually transmits messages that include

- the time the message was transmitted
- satellite position at time of message transmission

The receiver uses the messages it receives to determine the transit time of each message and computes the distance to each satellite using the speed of light. These distances along with the satellites' locations are used with the possible aid of trilateration, depending on which algorithm is used, to compute the position of the receiver. This position is then displayed, perhaps with a moving map display or latitude and longitude; elevation information may be included. Many GPS units show derived information such as direction and speed, calculated from position changes.

3.7 GSM

The **Global System for Mobile Communications** (**GSM**) is a standard developed by the European Telecommunications Standards Institute(ETSI) to describe the protocols for second-generation (2G) digital cellular networks used by mobile devices such as mobile phones and tablets. It was first deployed in Finland in December 1991.[2]By the mid-2010s, it became a global standard for mobile communications achieving over 90% market share, and operating in over 193 countries and territories.[3]

2G networks developed as a replacement for first generation (1G) analog cellular networks. The GSM standard originally described a digital, circuit-switched network optimized for full duplex voice telephony. This expanded over time to include data communications, first by circuit-switched transport, then by packet data transport via General Packet Radio Service (GPRS), and Enhanced Data Rates for GSM Evolution(EDGE).

Subsequently, the 3GPP developed third-generation (3G) UMTS standards, followed by fourth-generation (4G) LTE Advanced standards, which do not form part of the ETSI GSM standard.

"GSM" is a trade mark owned by the GSM Association. It may also refer to the (initially) most common voice codec used, Full Rate.

Technical details

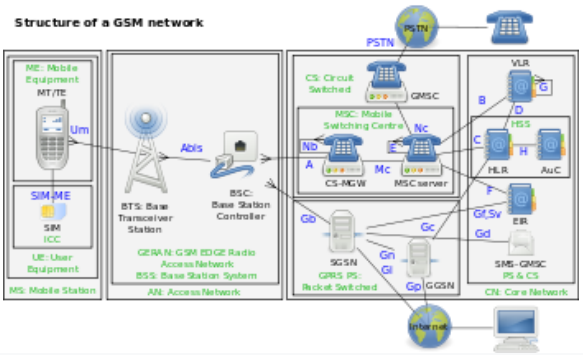

The structure of a GSM network

3.8 LIGHT DEPENDENT RESISTOR

A photo resistor or light dependent resistor (LDR) is a resistor whose resistance decreases with increasing incident light intensity; in other words, it exhibits photoconductivity. It can also be referred to as a photoconductor or CdS device, from "cadmium sulfide," which is the material from which the device is made and that actually exhibits the variation in resistance with light level. Note that CdS is not a semiconductor in the usual sense of the word (not doped silicon).

A photoresistor is made of a high resistance semiconductor. If light falling on the device is of high enough frequency, photons absorbed by the semiconductor give bound electrons enough energy to jump into the conduction band. The resulting free electron (and its hole partner) conduct electricity, thereby lowering resistance.

A photoelectric device can be either intrinsic or extrinsic. An intrinsic semiconductor has its own charge carriers and is not an efficient semiconductor, e.g. silicon. In intrinsic devices the only available electrons are in the valence band, and hence the photon must have enough energy to excite the electron across the entire bandgap. Extrinsic devices have impurities, also called dopants, added whose ground state energy is closer to the conduction band; since the electrons do not have as far to jump, lower energy photons (i.e., longer wavelengths and lower frequencies) are sufficient to trigger the device. If a sample of silicon has some of its atoms replaced by phosphorus atoms (impurities), there will be extra electrons available for conduction. This is an example of an extrinsic semiconductor. Photo resistors are basically photocells.

LDRs or Light Dependent Resistors are very useful especially in light/dark sensor circuits. Normally the resistance of an LDR is very high, sometimes as high as 1000 000 ohms, but when they are illuminated with light resistance drops dramatically.

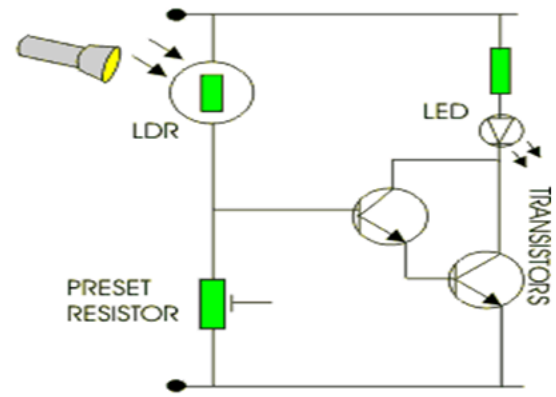

This is an example of a light sensor circuit:

When the light level is low the resistance of the LDR is high. This prevents current from flowing to the base of the transistors. Consequently the LED does not light. However, when light shines onto the LDR its resistance falls and current flows into the base of the first transistor and then the second transistor, the LED lights. The preset resistor can be turned up or down to increase or decrease resistance, in this way it can make the circuit more or less sensitive.

3.9 IR SENSOR

Infrared is a energy radiation with a frequency below our eyes sensitivity, so we cannot see it
Even that we can not "see" sound frequencies, we know that it exist, we can listen them.

Even that we can not see or hear infrared, we can feel it at our skin temperature sensors. When you approach your hand to fire or warm element, you will "feel" the heat, but you can't see it. You can see the fire because it emits other types of radiation, visible to your eyes, but it also emits lots of infrared that you can only feel in your skin.

INFRARED IN ELECTRONICS

Infra-Red is interesting, because it is easily generated and doesn't suffer electromagnetic interference, so it is nicely used to communication and control, but it is not perfect, some other light emissions could contains infrared as well, and that can interfere in this communication. The sun is an example, since it emits a wide spectrum or radiation.

The adventure of using lots of infra-red in TV/VCR remote controls and other applications, brought infra-red diodes (emitter and receivers) at very low cost at the market.

From now on you should think as infrared as just a "red" light. This light can means something to the receiver, the "on or off" radiation can transmit different meanings.Lots of things can generate infrared, anything that radiate heat do it, including out body, lamps, stove, oven, friction your hands together, even the hot water at the faucet.

To allow a good communication using infra-red, and avoid those "fake" signals, it is imperative to use a "key" that can tell the receiver what is the real data transmitted and what is fake. As an analogy, looking eye naked to the night sky you can see hundreds of stars, but you can spot easily a far away airplane just by its flashing strobe light. That strobe light is the "key", the "coding" element that alerts us.

Similar to the airplane at the night sky, our TV room may have hundreds of tinny IR sources, our body, the lamps around, even the hot cup of tea. A way to avoid all those other sources, is generating a key, like the flashing airplane. So, remote controls use to pulsate its infrared in a certain frequency. The IR receiver module at the TV, VCR or stereo "tunes" to this certain frequency and ignores all other IR received. The best frequency for the job is between 30 and 60kHz, the most used is around 36kHz

IV. PROJECT DESCRIPTION

This project ensures that the customers can easily identify the

4.1. BLOCK DIAGRAM:

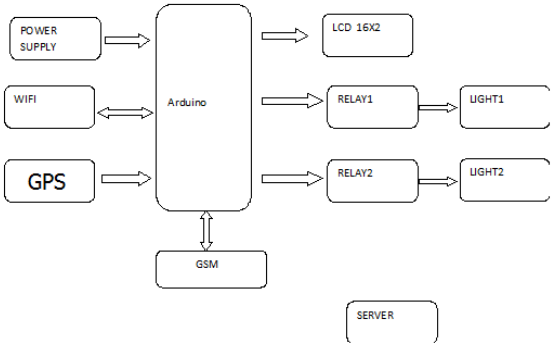

Fig 6.1 block diagram

4.2. SOFTWARE REQUIREMENTS:

- Arduino IDE
- Arduino programming

4.3. HARDWARE REQUIREMENTS:

1. Arduino UNO
2. Wifi module
3. Relays
4. GSM
5. Mobile phone
6. 7805 for external power supply
7. GPS
8. BULB WITH HOLDER
9.LDR

4.4. WORKING:

The proposed smart street lamp (SSL) mainly consists of three parts:

1) intelligent sensing street lamp, the brightness of street lamp can be adjusted, and an autonomous alarm will notify about abnormal behavior; for this here I used used LDR sensor used for brightness adjustment through intensity of light.

2) efficient network, the network can be used for real time communication, the NB-IoT is adopted for communication between server and massive street lamps, and the Internet technology, such as WiFi and 4G, are adopted for communication between server and managers; Here I used the ESP8266 WIFI for communication and GSM used for to know the communication when iot is not available

3) flexible management platform, the management platform can optimize resource scheduling for easy

and highly automated management like thefting or fault condition . The SSL architecture is shown in block diagram. In this situation, I used IR sensor and Bulb and holder and Current sensor.

IR sensor for activated when the bulb is some one theft.

Current sensor used for to know the bulb is working or not.

V. CONCLUSION

In order to satisfy the requirements of smart cities, this paper proposes a smart street lamp (SSL) based on fog computing. The SSL mainly consists of three parts: 1) intelligent sensing street lamp (street lamp brightness can be adjusted and autonomous alarm notifies about lamp abnormal state); 2) efficient network (real-time communication is achieved, the NBIoT is adopted for communication between server and massive street lamps, and the Internet communication technology, such as Wi-Fi and 4G, is adopted for communication between server and managers); and 3) flexible management platform (management platform can optimize resource scheduling for easy and highly automated management of street lamp system). The proposed SSL was verified by its application in Xiasha district of Hangzhou, China, and obtained results proved high efficiency. The average maintenance period, which denoted the time between the abnormal lamp state appeared and the server checked it, was about 20 minutes. Moreover, the proposed SSL can reduce human resources by eliminating unnecessary periodic inspections. In the future, we have two mainly works: 1) make the proposed SSL be used in current smart cities; 2) adopt the proposed technique to some other fields in smart.

REFERENCES

[1] Vladimir Bychkovsky, Bret Hull, Allen Miu, Hari Balakrishnan, Samuel Madden. A measurement study of vehicular internet access using in situ Wi-Fi networks. In MobiCom'06, pp. 50-61, 2006.

[2] B Chatschik. An overview of the Bluetooth wireless technology. IEEE Communications Magazine, 39(12): 86-94, 2001.

[3] H Farahani. ZigBee and IEEE 802.15.4 Protocol Layers C ZigBee Wireless Networks and Transceivers. Zigbee Wireless Networks & Transceivers, pp. 33-135, 2008.

[4] S Schwarz, C Mehlfuhrer, M Rupp. Calculation of the spatial preprocessing and link adaption feedback for 3GPP UMTS/LTE. Wireless Advanced, pp. 1-6, 2010.

[5] R. He, B. Ai, G. Wang, K. Guan, Z. Zhong. High-Speed Railway Communications: From GSM-R to LTE-R. IEEE Vehicular Technology Magazine, 11(3): 49-58, 2016.

[6] RS Sinha, Y. Wei, SH Hwang. A survey on LPWA technology: LoRa and NB-IoT. lct Express, 3(1), 2017.

[7] Weisong Shi, Jie Cao, Quan Zhang, Youhuizi Li, Lanyu Xu. Edge Computing: Vision and Challenges. IEEE Internet of Things Journal, 3(5), PP. 637-646, 2016.

[8] Yuyi Mao, Changsheng You, Jun Zhang, Kaibin Huang, Khaled B. Letaief. A Survey on Mobile Edge Computing: The Communication Perspective. IEEE Communications Surveys & Tutorials, DOI: 10.1109/COMST.2017.2745201, 2017.

[9] G. Han, L. Liu, S. Chan, R. Yu, Y. Yang. HySense: A Hybrid Mobile CrowdSensing Framework for Sensing Opportunities Compensation under Dynamic Coverage Constraint. IEEE COMMUNICATIONS MAGAZINE, 55(3): 93-99, 2017.

[10] Tarik Taleb, Sunny Dutta, Adlen Ksentini, Muddesar Iqbal, Hannu Flinck. Mobile Edge Computing Potential in Making Cities Smarter. IEEE Communications Magazine, 55(3), pp. 38-43, 2017.