Journal of Engineering Sciences
Vol 10, Issue 9, Sept /2019
ISSN NO:0377-9254

BINARY TO DECIMAL FEATURE EXTRACTION BASED HANDWRITTIEN CHARACTER RECOGNITION SYSTEM USING FEED FORWARD NEURAL NETWORK

P.Mahes Kumar, J.Pradeep, Bairi Venkateshwarlu
jayabala.pradeep@pec.edu,

ABSTRACT:
In this paper, off-line handwritten English character recognition based Binary to Decimal method feature extraction method using multilayer Feed Forward neural network is proposed. Each character data set contains 26 alphabets. Two hundred different character data sets are used for training the neural network. The trained network is used for classification and recognition using different data sets. In the proposed system, each character is resized into 40x30 pixels, that is resized image is segmented into 12 zones, each zone of size 10x10 and again Each of these zones is resized into size 16x16 which is further subdivided into 16 subzones each of size 4x4. From the 4x4 sub-zone pixels are converted into its equinlet decimal values and it is taken as features for training the neural network. The result shows that the proposed system yields good recognition rates while combining with existing diagonal based feature extraction for handwritten character recognition.

KEYWORDS
Handwritten character recognition, Image processing, Feature extraction, feed forward neural networks.

1. INTRODUCTION

Handwriting Recognition has been one of the most fascinating and challenging research areas in field of image processing and pattern recognition in the recent years. It contributes immensely to the advancement of an automation process and can improve the interface between man and machine in numerous applications. Several research works have been focusing toward evolving newer techniques and methods that would reduce the processing time while providing higher recognition accuracy [1] [2].

In general, handwriting recognition is classified into two types as off-line and on-line handwriting recognition methods. In the off-line recognition, the writing is usually captured optically by a scanner and the completed writing is available as an image. But, in the on-line system the two dimensional coordinates of successive points are represented as a function of time and the order of strokes made by the writer are also available. The on-line methods have been shown to be superior to their off-line counterparts in recognizing handwritten characters due to the temporal information available with the former [3]. However, in the off-line systems, the neural networks have been successfully used to yield comparably high recognition accuracy levels [4]. Several applications including mail sorting, bank processing, document reading and postal address recognition require off-line handwriting recognition systems. As a result, the off-line handwriting recognition continues to be an active area for research towards exploring the newer techniques that would improve recognition accuracy [5] [6].

The first important step in any handwritten recognition system is pre-processing followed by segmentation and feature extraction. Pre-processing includes the steps that are required to shape the input image into a form suitable for segmentation [7]. In the segmentation, the input image is segmented into individual characters and then, each character is resized into m x n pixels towards the extracting the features.

The Selection of appropriate feature extraction method is probably the single most important factor in achieving high recognition performance. Several methods of feature extraction for character recognition have been reported in the literature [8]. The widely used feature extraction methods are Template matching, Deformable templates, Unitary Image transforms, Graph description, Projection Histograms, Contour profiles, Zoning, Geometric moment invariants, Zernike Moments, Spline curve approximation, Fourier descriptors, Gradient feature and Gabor features.

An artificial neural Network as the backend is used for performing classification and recognition tasks. In the off-line recognition system, the neural networks have emerged as the fast and reliable tools for classification towards achieving high recognition accuracy [9].

In this paper, an off-line handwritten characters system is proposed for the recognizing the English characters using Binary to Decimal method feature extraction method. In this feature extraction process, the character image of size 40x30 pixels is divided into 12 equal zones; each of size 10x10 pixels and further each zone are subdivided into 16 subzones each of size 4x4. The features are extracted from each sub-zones pixel by moving along the forward and reverse horizontal of its respective 4x4 pixels. This procedure is repeated for all the zones leading to extraction of 192 features for each character. These extracted features are used to train a feed forward back propagation neural network employed for performing classification and recognition tasks. Extensive simulation studies show that the recognition system using diagonal features provides good recognition accuracy.

The paper is organized as follows. In section 2, the proposed recognition system is presented. The feature extraction procedure adopted in the system is detailed in the section 3. Section 4 describes the classification and recognition using feed forward back propagation neural network. In Section 5. Presents the experimental results and comparative analysis. In Section 6, the proposed recognition system in Graphical User Interface is presented and finally, the paper is concluded in section 7.

2. The Proposed Recognition System

A typical handwriting recognition system consists of pre-processing, segmentation, feature extraction, classification and recognition, and post processing stages. The schematic diagram of the proposed recognition system is shown in Figure.1

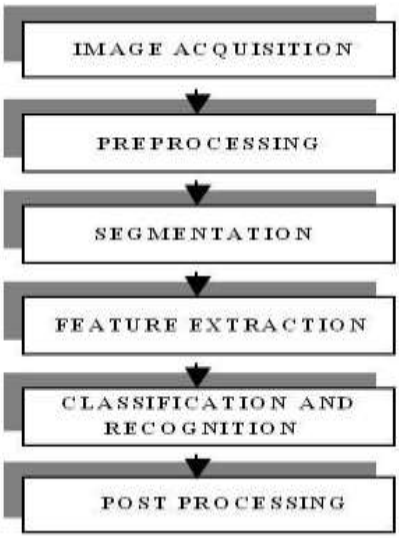

Figure 2. Schematic diagram of the proposed off-line recognition system

2.1. Image Acquisition

In Image acquisition, the recognition system acquires a scanned image as an input image. The image should have a specific format such as JPEG, BMT etc. This image is acquired through a scanner, digital camera or any other suitable digital input device. Data samples for the experiment have been done from the different individuals. Samples of handwritten English characters A to Z are shown in Figure 3.

Figure 3. Samples of handwritten English characters A to Z

2.2. Pre-processing

The pre-processing is a series of operations performed on the scanned input image. It essentially enhances the image rendering it suitable for segmentation. The various tasks performed on the image in pre-processing stage are shown in Figure.2. Binarization process converts a gray scale image into a binary image using global thresholding technique. Detection of edges in the binarized image using sobel technique, dilation the image and filling the holes present in it are the operations performed in the last two stages to produce the pre-processed image [10] suitable for segmentation.

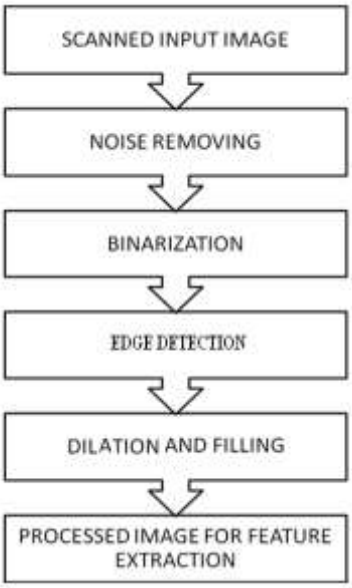

Figure 2. Preprocessing of handwritten character of image

2.3. Segmentation

In the segmentation stage, an image of sequence of characters is decomposed into sub-images of individual character [11]. In the proposed system, the pre-processed input image is segmented into isolated characters by assigning a number to each character using a labeling process. This labeling provides information about number of characters in the image. Each individual character is uniformly resized into 90X60 pixels for extracting its features.

2.4. Feature Extraction

In this stage, the features of the characters that are crucial for classifying them at recognition stage are extracted. This is an important stage as its effective functioning improves the recognition rate and reduces the misclassification [12]. Binary to Decimal method feature extraction scheme for recognizing off-line handwritten characters is proposed in the work. Every character image of size 40x30 pixels is divided into 12 equal zones, each of size 10x10 pixels (Figure.3(c)). Each of these zones is resized into size 16x16 which is further subdivided into 16 subzones

each of size 4x4. The features are extracted from each sub-zones pixel by moving along the forward and reverse horizontal of its respective 4x4 pixels. Each zone has 4 horizontal lines and the foreground pixels present along each horizontal line are converted to its decimal equivalent and thus 4 sub-features are obtained from the each sub-zone. These 4 sub-features values are averaged to form a single feature value and placed in the corresponding sub-sub-zone in the 16X16 zone. Thus it yields 16 features per zone (Figure.3 (b)). This procedure is sequentially repeated for the all the zones. There could be some sub-zones whose horizontal are empty of foreground pixels. The feature value corresponding to these zones are zero. Finally, 192 features are extracted for each character. Each row of the 4x4 subzone is converted to its decimal equivalent, thus four values are obtained from horizontal forward direction and another four values are obtained horizontal reverse direction. Finally the mean of these eight values is calculated and this mean value is taken as a feature. Similarly the mean values for all the subzones are calculated which will yields a16 features per zone. Since the image has 12 zones, therefore the total of 12x16=192 features are extracted for a single character image

Decimal coded feature extraction

- The input image is normalized to size 40x30. This resized image is segmented into 12 zones, each of size 10x10.
- Each of these zones is resized into size 16x16 which is further subdivided into 16 subzones each of size 4x4.
- Since the image is binary , each 4x4 subzone contains '0's and '1's only
- Each row of the 4x4 subzone is converted to its decimal equivalent, thus four values are obtained when seeing from left to right and another four values when seeing from right to left. Mean of these eight values is calculated
- This mean value is taken as a feature, similarly the mean values for all the subzones are calculated thus yielding 16 features per zone
- Since the image has 12 zones, a total of 12x16=192 features are extracted for a single character image

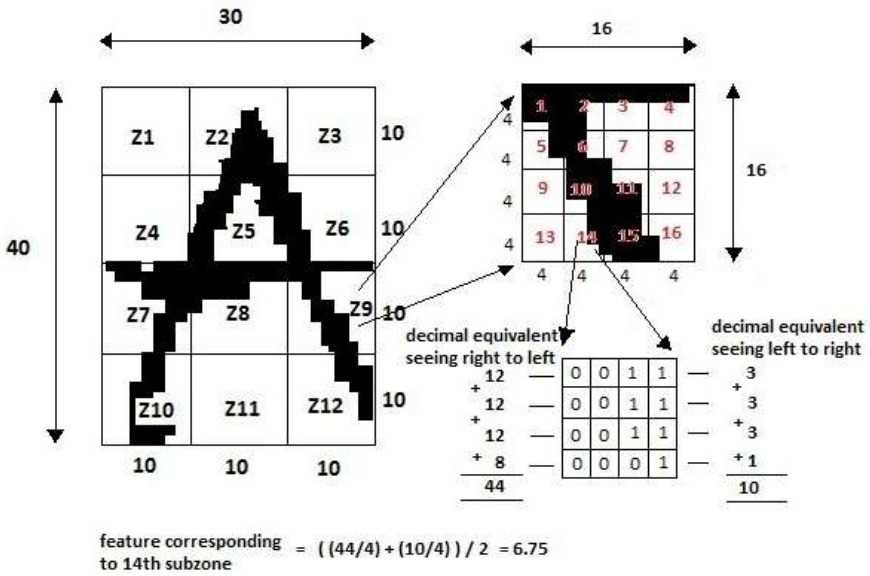

Figure 3. Proposed Feature Extraction

2.5. Classification and Recognition

The classification stage is the decision making part of a recognition system and it uses the features extracted in the previous stage. A feed forward back propagation neural network with two hidden layers with architecture of 192-100-100-26 is used to perform the classification. The hidden layers use log sigmoid activation function, and the output layer is a competitive layer as one of the characters have to be identified. The feature vector is denoted as X, and defined as $X = (f_1, f_2, \ldots, f_d)$, Where f denotes features and d is the number of zones into which each character is

divided. The number of input neurons is determined by length of the feature vector d. The total numbers of characters n determines the number of neurons in the output layer. The numbers of neurons in the hidden layers are obtained by trial and error.

The network training parameters are:

- Input nodes : 600
- Hidden nodes : 200 each
- Output nodes :26 (26 alphabets)
- Training algorithm : Gradient descent with momentum training and adaptive learning
- Perform function :Mean Square Error
- Training goal achieved: 10e-8.
- Training epochs :500000
- Training momentum constant : 0.9

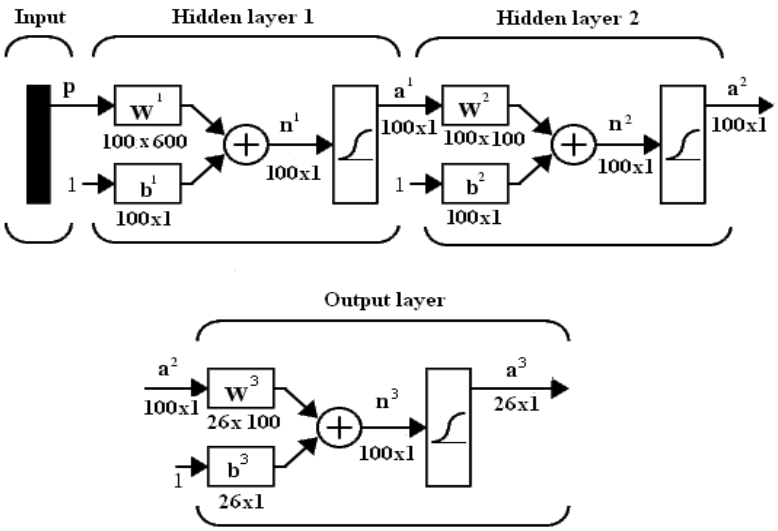

Figure 5. Three layer neural network for character recognition

The architecture of the network with two layers is illustrated in fig. 4. The output of ith layer is given by

$$a^i = \log sig(w^i a^{i-1} + b^i) \quad (1)$$

where,

$i = [1,2,3]$ and $a^0 = \mathbf{P}$

w^i = Weight vector of ith layer

a^i = Output of ith layer

b^i = Bias vector for i^{th} layer

3.2. Nearest neighbor classifier

1n pattern recognition, nearest neighbor algorithm (NN) is a method for classifying objects based on closest training in the feature space. It is a type of instance-based learning where the function is only approximated locally and all computation is deferred until classification. The nearest neighbor algorithm is amongst the simplest of all machine learning algorithms, an object is classified by a majority vote of its neighbors, with the object being assigned to the class most common amongst its nearest neighbours. The training phase of the algorithm consists only of storing the feature vectors and class labels of the training samples. In the classification phase, the same features as before are computed for the test samples. Distances from the new vector to all the stored vectors are computed. Then Classification and recognition is achieved on the basis of similarity measurement.

3.3. Radial basis function (RBF)

Radial basis function (RBF) network is appropriate an increasingly popular neural network with various applications and probably the main rival to the multi-layered perceptron. This much of the inspiration for RBF networks has come from traditional statistical pattern classification techniques.

RBF network have Gaussian function as the nonlinearity for the hidden layer processing elements. The Gaussian function responds only to a small region of the input space where the Gaussian is centered. The key to a successful implementation of these networks is to find suitable centers for the Gaussian functions.

The basic architecture for a RBF is a 3-layer network, as shown in Figure 6. The input layer is simply a disperse layer and does no processing. The hidden layer performs a non-linear mapping from the input space into a higher dimensional space in which the patterns become linearly separable

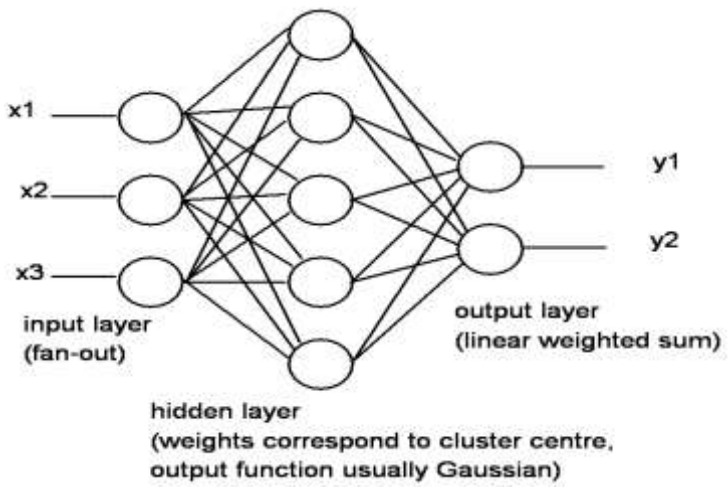

Figure 6. Three layer architecture of Radial basis function (RBF) network

The Output layer performs a simple weighted sum with a linear output. Therefore the RBF network is used for function approximation (matching a real number) then this output is fine. However, if pattern classification is required, then a hard-limiter or sigmoid function could be placed on the output neurons to give 0/1 output values.

4. Results and Discussion

In this section, the proposed recognition system has been implemented using Matlab7.1. The scanned image is taken as dataset/ input and feed forward architecture is used. The number of input neurons is chosen based on the number of features. As each image is resized into 30X20 pixels the input layer with 600 neurons. The number of output neurons is based on the number of alphabets. As all the English alphabets are used, the output layer has 26 neurons. All the neurons use log-sigmoid transfer functions. The back propagation algorithm with momentum and adaptive learning rate is used to obtain the parameters of the network. Fifty different handwritten data sets are used for training the neural network. The number of hidden neurons and the number of layers have to be obtained through trial and error. Through numerous simulations it was identified that a maximum of two hidden layers and a maximum of 300 neurons in the hidden layer would be sufficient for character recognition. With this identified limits seven different architectures are choosen and trained for a target MSE of 10e-8. The training results are shown in Table 1. It can be seen that all the networks have been trained for the target MSE. The parameters of the trained networks are frozen to enable testing. The seven networks are tested using ten different handwritten data sets the results are shown in Table. I

From the test results it is concluded that Network 5 gives the best overall recognition accuracy. Hence this architecture is chosen for the handwritten recognition system in this paper and shown in Fig.4. The convergence of the training data for the identified 600-200-200-26 network is shown in fig.5.

Table 1. Comparison of the recognition rates
Details of the seven neural based

Hybrid feature:

Feature Extraction	Binary(192)	Diagonal(54f)	Binary + Diagonal(54	Binary + Diagonal(108)
Recognition Rate%	96.15	93.65	95.96	96.73

Integration of classifier and feature extraction:

Feature extraction	Type of classifier	Recognition rate%
Binary	FF	96.15
	RB	94.61
	NN	89.42
Diagonal	FF	95.76
	RB	93.84
	NN	92.11
Hybrid: Binary(192) & Diagonal(108)	All integrated	**98.84**

Feature extraction	Type of classifier	Recognition Rate%
Binary	FF	96.34
	RB	93.84
	NN	90.57
Diagonal	FF	95.76
	RB	93.84
	NN	92.11
Hybrid : Binary(120) & diagonal(108)	All integrated	**99.03**

Feature extraction	Type of classifier	Recognition Rate%
Binary	FF	96.34
	RB	93.84
	NN	90.57
Hybrid: Binary (120)& diagonal(123)	All integrated	**98.23**

5. CONCLUSIONS

A handwritten recognition without feature extraction system using multilayer Feed forward neural network is proposed in this paper. Seven different architectures are choosen by varying the number of hidden layers and the number neurons in each hidden layers. The networks are trained for the same target MSE, using the same data set.

Journal of Engineering Sciences

The network parameters obtained are frozen and tested using ten different data sets. It was identified that the 600-100-100-26 network exhibited highest average recognition accuracy of 90.11 %. The proposed neural network based off-line hand written alphabet recognition system is shown to provide encouraging results even without feature extraction. This method would be suitable for serval applications including handwriting name recognition, document reading and conversion of any handwritten document into structural text form.

REFERENCES

[1] F.Akyildiz, W.Su, Y.Sankarasubramaniam, and E.Cayirci, (2002) "A survey on sensor networks", IEEE Communications Magazine, Vol. 40, No.8, pp.102-114.

[2] M.Cardei, J.Wu, (2006) "Energy-efficient coverage problems in wireless ad-hoc sensor networks", Journal of Computer Communication, Vol. 29, No.4, pp. 413-420.

[3] A.Mainwaring, J.Polastre, R.Szewezyk, D.Culler and J.Anderson, (2002) "Wireless sensor networks for habitat montoring", Proceedings of first ACM Internatonal Workshop on Wireless Sensor Networks and Applictions, Atlanta, USA.

[4] J.Byres, G.Nasser, (2000) "Utility-based decision making in wireless sensor networks", Proceedings of the first ACM International Symposium on Mobile ad-hoc networking and Computing, pp.143-144.

[5] S.Panichpapiboon, G.Ferrair, O.K.Tonguz, (2006) "Optimal transmit power in wireless sensor networks", IEEE Transactions on Mobile Computing, Vol. 5, No.10, pp.1432-1447.

[6] C. U. Saraydar, N. B. Mandayam, and D. J. Goodman, "Efficient power control via pricing in wireless data networks", IEEE Transactions on Communication, Vol. 50, pp. 291–303, 2002.

[7] M. Hayajneh and C. T. Abdallah, "Distributed joint rate and power control game-theoretic algorithms for wireless data," IEEE Communication Letter, Vol. 8, pp. 511–513, August 2004.

[8] A. B. MacKenzie and S. B. Wicker, "Game theory in communications: Motivation, explanation, and application to power control", Proceedings to the IEEE Global Telecommunications Conference, pp. 821–826, San Antonio, TX, USA, 2001.

[9] A. Sampath, P.S. Kumar, and J. Holtzman, "Power control and resource management for a multimedia CDMA wireless system", Proceedings of IEEE International Symposium on Personal, Indoor and Mobile Radio Communications (PIMRC), Vol. 1, pp. 21-25, September 1995.

[10] R. Yates, "A Framework for Uplink Power Control in Cellular Radio Systems", IEEE Journal on Selected Areas in Communication, Vol. 13, no. 7, pp. 1341-1348, September 1995.

[11] M. Maskery and V. Krishnamurthy, "Decentralized adaptation in sensor networks: Analysis and application of regret-based algorithms", Proceedings of 46th IEEE Conference on Decision and Control, pp. 951-956, December 2007.

[12] A. Sampath, P.S. Kumar and J.M. Holtzman, "On setting reverse link target SIR in a CDMA systems", Proceedings of IEEE VTC, pp. 929-933, 1997.

[13] F. Gunnarsson, Power Control in Wireless Networks – Characteristics and Fundamentals, M. Guizani, Editor, Wireless Communications Systems and Networks, Kluwer Academic Press,

Journal of Engineering Sciences