Journal of Engineering Sciences
Vol 11, Issue 2, FEB /2020
ISSN NO:0377-9254

PRISONER LOCALIZATION AND ESCAPE PREVENTION INSIDE THE PRISON

[1]G Vinod Kumar, [2]Dr. D SubbaRao
[1]PG Scholar, MTech, Dept of ECE, Siddhartha Institute of Engineering & Technology, Ibrahimpatnam, T.S.
gundlavinodkumar@gmail.com
[2]Professor & HOD, Dept of ECE, Siddhartha Institute of Engineering & Technology, Ibrahimpatnam, T.S.

ABSTRACT

Existing researches on location tracking focus either entirely on indoor or entirely on outdoor by using different devices and techniques. Several solutions have been proposed to adopt a single location sensing technology that fits in both situations. This paper aims to track a user position in both indoor and outdoor environments by using a single wireless device with minimal tracking error. RSSI (Received Signal Strength Indication) technique together with enhancement algorithms is proposed to cater this solution. The proposed RSSI-based tracking technique is divided into two main phases, namely the calibration of RSSI coefficients (deterministic phase) and the distance along with position estimation of user location by iterative trilateration (probabilistic phase).

A low complexity RSSI smoothing algorithm is implemented to minimize the dynamic fluctuation of radio signal received from each reference node when the target node is moving. Experiment measurements are carried out to analyze the sensitivity of RSSI. The results reveal the feasibility of these algorithms in designing a more accurate real-time position monitoring system.

I. INTRODUCTION

A WIRELESS Sensor Network (WSN) is used to monitor an area of interest through collaborative sensing, computing, and wireless communication of sensors scattered in the area. Because sensors transmit data wirelessly, sensors' locations can be dynamically adjusted depending on on-site needs [14]. In other words, WSNs are very suited for application in surveillance of special terrains and hazardous zones.

For instance, applications of WSNs in special terrains or hazardous zones include volcano monitoring [15][21][29], battle monitoring [12][17], underwater monitoring [13][18][30], and fire monitoring [1][2]. In general, the coverage problems in WSNs can be classified into point coverage, line coverage, and area coverage. These three types of coverage problems are also called target coverage problem, barrier coverage problem and area coverage problem respectively. (1) Target coverage problem: sensors monitor each target in the

II. IMPLEMENTATION

POWER SUPPLY

The power supply section is the section which provide +5V for the components to work. IC LM7805 is used for providing a constant power of +5V. The ac voltage, typically 220V, is connected to a transformer, which steps down that ac voltage down to the level of the desired dc output. A diode rectifier then provides a full-wave rectified voltage that is initially filtered by a simple capacitor filter to produce a dc voltage. This resulting dc voltage usually has some ripple or ac voltage variation.

A regulator circuit removes the ripples and also retains the same dc value even if the input dc voltage varies, or the load connected to the output dc voltage changes. This voltage regulation is usually obtained using one of the popular voltage regulator IC units.

BLOCK DIAGRAM

Receiver section:section 1 (Prisoner1):

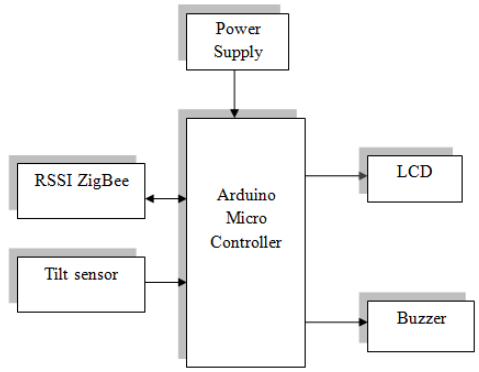

Transmitter Section 2 (control room):

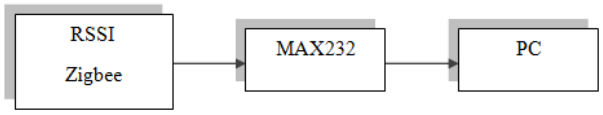

ARDUINO UNO

Arduino/genuino Uno is a microcontroller board based on the atmega328p (datasheet). It has 14 digital input/output pins (of which 6 can be used as pwm outputs), 6 analog inputs, a 16 MHz quartz crystal, a usb connection, a power jack, an icsp header and a reset button. It contains everything needed to support the microcontroller; simply connect it to a computer with a usb cable or power it with a ac-to-dc adapter or battery

to get started.. You can tinker with your uno without worrying too much about doing something wrong, worst case scenario you can replace the chip for a few dollars and start over again.

TECHNICAL SPECIFICATIONS

Microcontroller	ATmega328P
Operating Voltage	5V
Input Voltage (recommended)	7-12V
Input Voltage (limit)	6-20V
Digital I/O Pins	14 (of which 6 provide PWM output)
PWM Digital I/O Pins	6
Analog Input Pins	6
DC Current per I/O Pin	20 mA
DC Current for 3.3V Pin	50 mA
Flash Memory	32 KB (ATmega328P) of which 0.5 KB used by bootloader
SRAM	2 KB (ATmega328P)
EEPROM	1 KB (ATmega328P)
Clock Speed	16 MHz
LED_BUILTIN	13
Length	68.6 mm
Width	53.4 mm
Weight	25 g

LIQUID CRYSTAL DISPLAY (LCD)

LCD (Liquid Crystal Display) screen is an electronic display module and find a wide range of applications. A 16x2 LCD display is very basic module and is very commonly used in various devices and circuits. These modules are preferred over seven segments and other multi segment LEDs. The reasons being: LCDs are economical; easily programmable; have no limitation of displaying special & even custom characters (unlike in seven segments), animations and so on. A **16x2 LCD** means it can display 16 characters per line and there are 2 such lines. In this LCD each character is displayed in 5x7 pixel matrix. This LCD has two registers, namely, Command and Data.

The command register stores the command instructions given to the LCD. A command is an instruction given to LCD to do a predefined task like initializing it, clearing its screen, setting the cursor position, controlling display etc. The data register stores the data to be displayed on the LCD. The data is the ASCII value of the character to be displayed on the LCD.

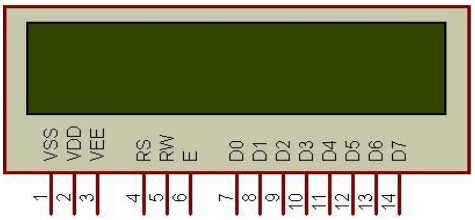

Fig. 16x2 LCD

BUZZER

A buzzer or beeper is a signaling device, usually electronic, typically used in automobiles, house hold appliances such as a microwave oven, or game shows.

It most commonly consists of a number of switches or sensors connected to a control unit that determines if and which button was pushed or a preset time has lapsed, and usually illuminates a light on the appropriate button or control panel, and sounds a warning in the form of a continuous or intermittent buzzing or beeping sound.

Initially this device was based on an electromechanical system which was identical to an electric bell without the metal gong (which makes the ringing noise). Often these units were anchored to a wall or ceiling and used the ceiling or wall as a sounding board. Another implementation with some AC-connected devices was to implement a circuit to make the AC current into a noise loud enough to drive a loudspeaker and hook this circuit up to a cheap 8-ohm speaker. Nowadays, it is more popular to use a ceramic-based piezoelectric sounder like a Son alert which makes a high-pitched tone. Usually these were hooked up to "driver" circuits which varied the pitch of the sound or pulsed the sound on and off.

MAX232 IC:

The MAX232is an IC, first made by Maxim Integrated Products, that changes over sign from aRS-232 sequential port to signals appropriate for use in TTL good computerized rationale circuits. The MAX232 is a double driver/recipient and commonly changes over the RX, TX, CTS and RTS signals.

The drivers give RS-232 voltage level yields (approx.± 7.5 V) from a solitary+ 5 V supply by means of on-chip charges iPhone's and outer capacitors. This makes it helpful for executing RS-232 in gadgets that generally needn't bother with any voltages outside the 0V to + 5V range, as power supply configuration shouldn't be made increasingly muddled only for driving the RS-232for this situation.

The collectors diminishRS-232 sources of info (which might be as high as ± 25V), to standard 5VTTL levels. These recipients shave an ordinary limit of 1.3 V, and a run of the mill hysteresis of 0.5 V.

ZIGBEE

ZigBee is a specification for a suite of high-level communication protocols used to create personal area networks built from small, low-power digital radios. ZigBee is based on an IEEE 802.15 standard. Though low-powered, ZigBee devices often transmit data over longer distances by passing data through intermediate devices to reach more distant ones, creating a mesh network; i.e., a network with no centralized control or high-power transmitter/receiver able to reach all of the networked devices. The decentralized nature of such wireless ad hoc networks makes them suitable for applications where a central node can't be relied upon.

TILT SENSOR

Tilt sensors allow you to detect orientation or inclination. They are small, inexpensive, low-power and easy-to-use. If used properly, they will not wear out. Their simplicity makes them popular for toys, gadgets and appliances. Sometimes they are referred to as "mercury switches", "tilt switches" or "rolling ball sensors" for obvious reasons. They are usually made by a cavity of some sort (cylindrical is popular, although not always) and a conductive free mass inside, such as a blob of mercury or rolling ball. One end of the cavity has two conductive elements (poles). When the sensor is oriented so that that end is downwards, the mass rolls onto the poles and shorts them, acting as a switch throw. Tilt switches used to be made exclusively of mercury, but are rarer now since they are recognized as being extremely toxic. The benefits of mercury are that the blob is dense enough that it doesn't bounce and so the switch isn't susceptible to vibrations. On the other hand, ball-type sensors are easy to make, wont shatter, and pose no risk of pollution.

III. RESULTS AND OUTPUT SCREENSHOTS

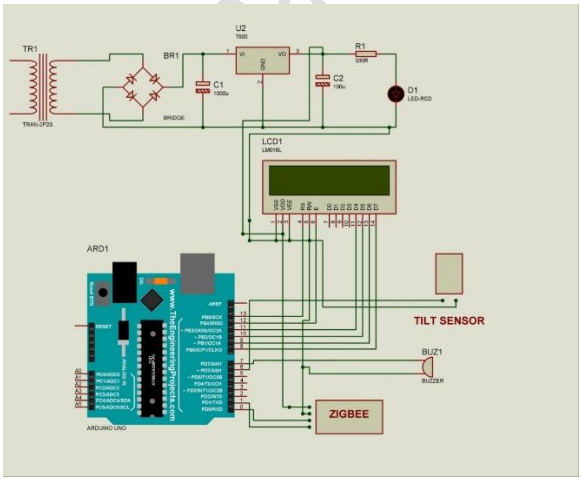

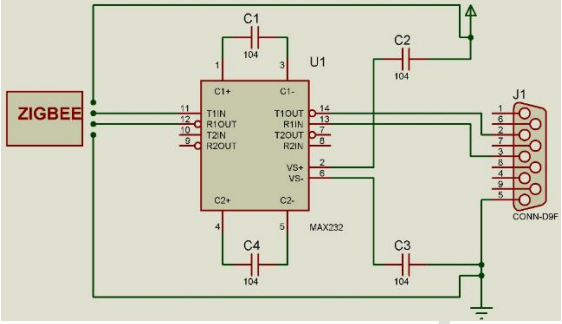

IV. CONCLUSION

As far as we could possibly know, none of the current works manages the objective hindrance inclusion issue. In this paper, a heuristic target-boundary development calculation is proposed to take care of the objective obstruction inclusion issue while fulfilling the bound imperative. Through reproduction tests, we affirm that the proposed TBC calculation can utilize a modest quantity of message trade (under 1.3%~0.03% of that utilized by Brute-Force, under 72%~15% of that utilized by DCA; and for single target situation; see and for various targets situation) to locate a close least number of individuals (inside 4% contrast from the base number of individuals required; see, and for single target situation; see and for numerous objectives situation) for building target-boundaries in the situations considered. Besides, the reenactment results additionally demonstrate that the proposed union system can lessen the quantity of target-hindrance individuals required in the situations considered.

REFERENCES

[1] M. Angeles Sema, A. Bermudez, R. Casado, "Circle-based approximation to forest fires with distributed wireless sensor networks," *Proc. IEEE WCNC'13*, pp. 4329-4334, 2013.

[2] S. Bhattacharjee, P. Roy, S. Ghosh, S. Misra, M.S. Obaidat, "Wireless sensor network-based fire detection, alarming, monitoring and prevention system for bord-and-pillar coal mines," *J. Syst. Softw.*, pp. 571-851, 2012.

[3] A. Chen, Y. Zhu, Z. Li, T.H. Lai, C. Liu, "Is one-way barrier coverage achievable using comprehensive sensors?" *Comput. Commun.*, vol. 57, pp. 100-114, 2015.

[4] A. Chen, S. Kumar, T.H. Lai, "Local barrier coverage in wireless sensor networks," *IEEE Trans. Mobile Comput.*, vol. 9, no. 4, pp. 491-504, 2010.

[5] J. Chen, J. Li, T.H. Lai, "Energy-efficient intrusion detection with a barrier of probabilistic sensors: global and local," *IEEE Trans. Wirel. Commun.*, vol. 12, no. 9, pp. 4742-4755, 2013.

[6] M. Eftekhari, L. Narayanan, J. Opatmy "On multi-round sensor deployment for barrier coverage," *Proc. IEEE MASS'13*, pp. 310-318, 2013.

[7] D.W. Gage, "Command control for many-robot systems," *Proc. AUVS'92*, pp. 22–24, 1992.

[8] X. Gong, J. Zhang, D. Cochran, K. Xing, "Optimal placement for barrier coverage in bistatic radar sensor networks," *IEEE/ACM Trans. Netw*., vol. 24, no. 1, pp. 259-271, 2016.

[9] S. He, J. Chen, X. Li, X. Shen, Y. Sun, "Mobility and intruder prior information improving the barrier coverage of sparse sensor networks," *IEEE Trans. Mobile Comput.*, vol 13, no. 6, pp. 1268-1282, 2014.

[10] S. He, X. Gong, J. Zhang, J. Chen, Y. Sun "Curve-based deployment for barrier coverage in wireless sensor networks," *IEEE Trans. Wireless Commun*., vol. 13, no. 2, pp. 724-735, 2014.

[11] S. He, D.H. Shin, J. Zhang, J. Chen, Y. Sun, "Full-view area coverage in camera sensor networks: dimension reduction and near-optimal solutions," *IEEE Trans. Veh. Technol*., vol. 65, no. 9, pp. 7448-7461, 2016.

[12] S. Javadi, M.H. Hajiesmaili, A. Khonsari, B. Moshiri, "Temporal-aware rate allocation in mission-oriented WSNs with sum-rate demand guarantee," *Comput. Commun.*, vol. 59, pp. 52-66, 2015.

AUTHOR PROFILE'S

G VINOD KUMAR doing post-graduation in VLSI and Embedded systems from Siddhartha Institute of Engineering and Technology in Department of Electronics and Communication Engineering.

DR. D SUBBA RAO is a proficient Ph.D person in the research area of wireless communications from Rayalseema University, Kurnool along with initial degrees of Bachelor of Technology in Electronics and Communication Engineering (ECE) from Dr. SGIET, Markapur and Master of Technology in Embedded Systems from SRM University, Chennai. He has 16 years of teaching experience and has published 98 Papers in International Journals, 2 Papers in National Journals and has been noted under 4 International Conferences. He has a fellowship of The Institution of Electronics and Telecommunication Engineers (IETE) along with a Life time membership of Indian Society for Technical Education (ISTE). He is currently bounded as an Associate Professor and is being chaired as Head of the Department for Electronics and Communication Engineering discipline at Siddhartha Institute of Engineering and Technology, Ibrahimpatnam, Hyderabad.