Journal of Engineering Sciences
Vol 11, Issue 1, Jan /2020
ISSN NO:0377-9254

Multiple Motion Control System of Robotic Car Based on IoT to Produce Cloud Service

[1]Anusha Patnam, [2]Malathi Naddunoori, [3]Dr. D SubbaRao
[1]PG Scholar, MTech, Dept of ECE, Siddhartha Institute of Engineering & Technology, Ibrahimpatnam, T.S.
anushapatnam16@gmail.com
[2]Asst Professor, Dept of ECE, Siddhartha Institute of Engineering & Technology, Ibrahimpatnam, T.S.
[3]Professor & HOD, Dept of ECE, Siddhartha Institute of Engineering & Technology, Ibrahimpatnam, T.S.

ABSTRACT- The world of control is an exciting field that has exploded with new technologies where the Internet of Things (IoT) vision becomes reality. This paper proposes a multiple motion controlling mechanism of a robotic car using Raspberry Pi which works as master and Arduino UNO which works as slave. Each device is uniquely identifiable by the controlling software which is the core concept of IoT. Client manages the activities of the car from remote or distant places over the internet by voice commands and Universal Windows Application and also able to get data and feedback. The main contribution of this paper is that it leverages the efficiency of robot's motion controlling system because robotic car can receive direct commands at a time from multiple sources which make the maneuvering system more efficient. Both device and client do not need to be online at the same time. Commands and data are stored in cloud service which delivers them when the device is ready to receive. A GPS system is incorporated thus clients can trace the car. The system has ultrasonic distance sensor for avoiding obstacles coming in between its path. We present the architecture and design of the Raspberry Pi and Arduino communication software and illustrate how to control the car by means of commands and application.
Keywords - Raspberry Pi, Arduino, Ultrasonic distance sensor, GPS, motion control, cloud service, IoT.

I. INTRODUCTION

Having lesser limitations, more accuracy and being more reliable are what make an automaton more preferable. The controlling mechanism of these systems makes them more outstanding. Multiple control system ensures that a collection of independent computers appears to users as a single controlling system. It uses decentralized elements or subsystems to control distributed processes. They offer flexibility, extended equipment life, simplicity of new equipment integration, and centralized maintenance when used in an industrial environment [6]. Several advanced control systems of robots have been developed based on existing control techniques or new control techniques that have been built on purposes [7]. As a result, for efficient and flexible processing, the multiple control mechanism is more than a necessity. The accessibility and availability of inexpensive credit card sized single board computer such as Raspberry Pi has enabled the creation of numerous automated and controlling system that has low power consumption, faster processing ability at a lower cost. The multiple control system of robots proposed in this paper integrates the use of affordable instruments, connectivity, wireless communication and efficiency of controlling mechanism.

II. Background study and overview

This section provides a descriptive summary of some methods that have been implemented and tested for controlling system of robots and devices by Raspberry Pi and Arduino. Vladimir Vujovic et al. described a Raspberry Pi home automation system where Raspberry Pi works as a sensor web node for controlling appliances in home automation which makes it the perfect platform for interacting with many different devices. Here Raspberry Pi is not just a sensor node but a controller [1]. Yet the controlling mechanism only includes data collection and updating and works only in indoor environment. Another device controlling mechanism of Raspberry Pi is described in a Raspberry Pi based home automation system through E-mail [2]. The contribution of this paper is, Raspberry Pi can read out the commands of users through E-mail and the devices to be controlled are interfaced with Raspberry Pi using relay driver [2]. However, clients can only control the switching state of the appliances, no other controlling system is included. Jaroslav Sobota et al. [3], proposes extremely inexpensive and flexible control platform using Raspberry Pi and Arduino running the REX control system which is an open system for embedded control [3]. On the other hand, REX platform is not standard enough and unable to control a large number of devices at a time. Another real- time monitoring system has been implemented in developing a fire alarm system using Raspberry Pi and Arduino [4]. In this paper it is described how Raspberry Pi controls the situation based on sensors. However, it has not incorporated any user-controlled interaction and is only a sensor-based module. Anita Sabo et al. described a controlling mechanism of robotic arm using Raspberry Pi through the internet in a research paper [12]. In spite of its advantages, it has some limitations. It only incorporates the controlling mechanism through

web service and the client is unable to detect its location. Further, there is no feedback system and so the client has no way to be sure of effective execution of command, which is a must-have feature in any system connected to the internet. The solution for the problems from the previous researches as stated above is to develop a multiple controlling system that allows clients to control robots from distant places through voice commands and client application over the internet. Wireless connection is considered here. In this paper, the motion control system of robotic car is considered. Initially the commands include: move forward, move backward, turn left, turn right, rotate left, rotate right, activate obstacle detection, and deactivate obstacle detection. These commands can be given via voice commands and/or user application. It is possible to locate the car continuously in the UI and get feedback and data regarding to the car. Also, the ultrasonic distance sensor helps the robot to avoid collision with objects coming in between its path.

III. IMPLEMENTATION

BLOCK DIAGRAM

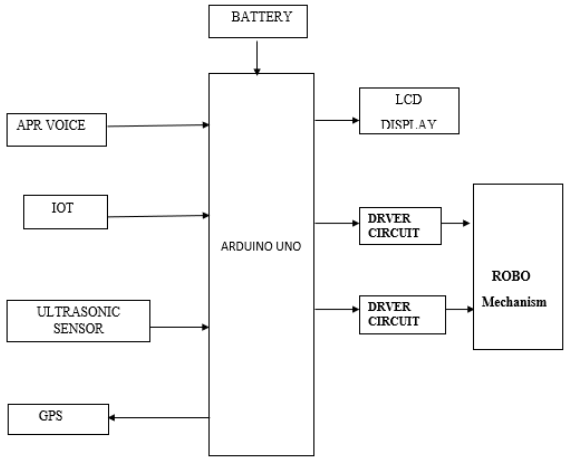

BATTERY

A battery is a device consisting of one or more electrochemical cells that convert stored chemical energy into electrical energy. Batteries are another way to produce electricity. They are smaller and safer. Batteries have one end that is positive and one end that is negative. For batteries to work, you need to make sure you put them in the right way. Batteries have become a common power source for many household and industrial applications.

There are two types of batteries: primary batteries (disposable batteries), which are designed to be used once and discarded, and secondary batteries (rechargeable batteries), which are designed to be recharged and used multiple times. Batteries come in many sizes, from miniature cells used to power hearing aids and wristwatches to battery banks the size of rooms that provide standby power for telephone exchanges and computer data centers.

2. ARDUINO UNO

Arduino/genuino Uno is a microcontroller board based on the atmega328p (datasheet). It has 14 digital input/output pins (of which 6 can be used as PWM outputs), 6 analog inputs, a 16 MHz quartz crystal, a USB connection, a power jack, an ICSP header and a reset button. It contains everything needed to support the microcontroller; simply connect it to a computer with a USB cable or power it with a ac-to-dc adapter or battery to get started. You can tinker with your uno without worrying too much about doing something wrong, worst case scenario you can replace the chip for a few dollars and start over again.

"Uno" means one in Italian and was chosen to mark the release of Arduino software (ide) 1.0. The uno board and version 1.0 of Arduino software (ide) were the reference versions of Arduino, now evolved to newer releases. The uno board is the first in a series of usb Arduino boards, and the reference model for the Arduino platform; for an extensive list of current, past or outdated boards see the Arduino index of boards.

TECHNICAL SPECIFICATIONS

Microcontroller	ATmega328P
Operating Voltage	5V
Input Voltage (recommended)	7-12V
Input Voltage (limit)	6-20V
Digital I/O Pins	14 (of which 6 provide PWM output)
PWM Digital I/O Pins	6
Analog Input Pins	6
DC Current per I/O Pin	20 mA
DC Current for 3.3V Pin	50 mA
Flash Memory	32 KB (ATmega328P) of which 0.5 KB used by bootloader
SRAM	2 KB (ATmega328P)
EEPROM	1 KB (ATmega328P)
Clock Speed	16 MHz
LED_BUILTIN	13
Length	68.6 mm
Width	53.4 mm
Weight	25 g

APR 9600 VOICE IC:

The APR9600 device offers true single-chip voice recording, non-volatile storage, and playback capability for 40 to 60 seconds. The IC is 28 pin device used to record & playback of maximum of 8 messages. The device supports both random and sequential access of multiple messages. Sample rates are user-selectable, allowing designers to customize their design for unique quality and storage time needs. the device is ideal for use in portable voice recorders, toys, and many other consumer and industrial applications.

The replayed sound exhibits high quality with a low noise level. Sampling rate for a 60 second recording period I s 4.2 kHz that gives a sound record/replay bandwidth of 20Hz to 2.1 kHz. However, by changing an oscillation resistor, a sampling rate as high as 8.0 kHz can be achieved. This shortens the total length of sound recording to 32 seconds.

Total sound recording time can be varied from 32 seconds to 60 seconds by changing the value of a single resistor. The IC can operate in one of two modes: serial mode and parallel mode. In serial access mode, sound can be recorded in 256 sections. In parallel access mode, sound can be recorded in 2, 4 or 8 sections. The IC can be controlled simply using push button keys. It is also possible to control the IC using external digital circuitry such as micro-controllers and computers.

ESP8266 WIFI IOT MODULE

Description:

- These modules include 1MB (8Mbit) of flash memory, twice the size of the older blue colored ESP-01 module
- The ESP8266 Serial/UART to Wi-Fi module is a great way to connect your Arduino or other microcontroller projects to a Wi-Fi network
- Create your next internet of things (IOT) project with affordable network connectivity by implementing this module into your design
- The module has the ability to run independent of a host controller
- The eight pin header includes two GPIO pins that allow for direct connection of the module to sensors, peripherals, or host controller
    - Check out our ESP8266 breadboard adapter to use your ESP8266 module with a breadboard
- The ESP8266 has 3.6V tolerant I/Os so you will need a logic level converter to connect it with higher voltage devices such as Arduino
- The ESP8266 requires 3.3V power so you may need a 3.3V voltage regulator to provide the correct voltage, depending on your setup

Product Contents:

- 1 — ESP8266 ESP-01 Wi-Fi Transceiver Module with baud rate set at 115200 bps
- 1 (per order) — Addicore ESP8266 info card (includes pinout diagram)

Specifications:

- 802.11 b/g/n
- Serial/UART baud rate: 115200 bps
- Integrated TCP/IP protocol stack
- Input power: 3.3V (see "Recommended Accessories" below for 3.3V power options)
- I/O voltage tolerance: 3.6V Max (see "Recommended Accessories" below for level converters to connect to higher voltage devices (i.e. Arduino))
- Regular operation current draw: ~70mA
- Peak operating current draw: ~300mA

ULTRASONIC SENSOR

Ultrasonic sensors are industrial control devices that use sound waves above 20,000 Hz, beyond the range of human hearing, to measure and calculate distance from the sensor to a specified target object.

Features of ultrasonic sensors:

- Devices with TEACH-IN functionality for fast and simple installation
- ULTRA 3000 software for improved adaptation of sensors to applications
- Adjustable sensitivity to the sound beam width for optimized adjustment of the sensor characteristics according to the application
- Temperature compensation - compensates for sound velocity due to varying air temperatures
- Synchronization input to prevent cross-talk interference when sensors are mounted within close proximity of each other
- Sensors with digital and/ or analog outputs

GLOBAL POSITIONING SYSTEM

- The Global Positioning System (GPS) is a satellite based navigation system that can be used to locate positions anywhere on earth. Designed and operated by the U.S. Department of Defense, it consists of satellites, control and monitor stations, and receivers. GPS receivers take information transmitted from the satellites and uses triangulation to calculate a user's exact location. GPS is used on incidents in a variety of ways, such as:

- GPS is made up of three parts: between 24 and 32 satellites orbiting the Earth, four control and monitoring stations on Earth, and the GPS receivers owned by users. GPS satellites broadcast signals from space that are used by GPS receivers to provide three-dimensional location (latitude, longitude, and altitude) plus the time.

LIQUID CRYSTAL DISPLAY (LCD)

- LCD (Liquid Crystal Display) screen is an electronic display module and find a wide range of applications. A 16x2 LCD display is very basic module and is very commonly used in various devices and circuits. These modules are preferred over seven segments and other multi segment LEDs. The reasons being: LCDs are economical; easily programmable; have no limitation of displaying special & even custom characters (unlike in seven segments), animations and so on.
- A **16x2 LCD** means it can display 16 characters per line and there are 2 such lines. In this LCD each character is displayed in 5x7 pixel matrix. This LCD has two registers, namely, Command and Data.
- The command register stores the command instructions given to the LCD. A command is an instruction given to LCD to do a predefined task like initializing it, clearing its screen, setting the cursor position, controlling display etc. The data register stores the data to be displayed on the LCD. The data is the ASCII value of the character to be displayed on the LCD.

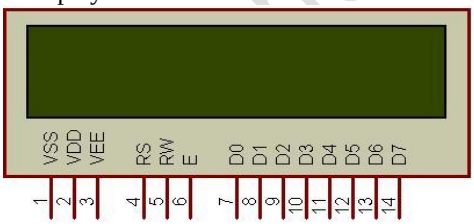

Fig. 16x2 LCD

IV. RESULTS

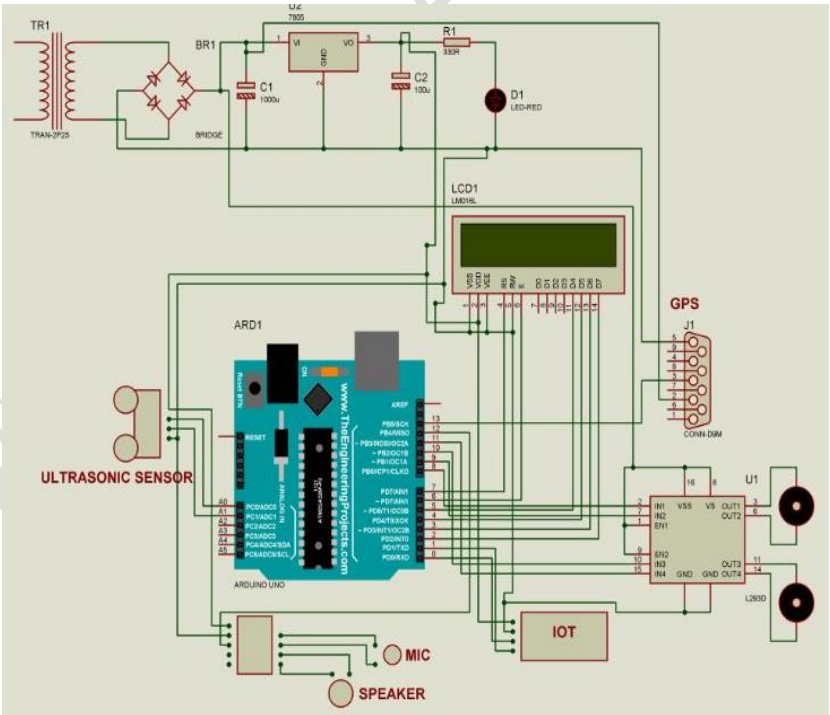

V. CONCLUSION AND FUTURE SCOPE

In this paper an efficient approach of multiple control system is incorporated with IoT. Controlling multiple devices in multiple ways makes causes more convenience in handling a system. The cloud service helps the system to reduce memory load. Stored messages are automatically removed after a certain amount of time. The performance results prove that if the incorporation is efficient enough, multiple controlling methods have less effect on time and performance compared to single way of control system. Yet, the system has some limitations. No video surveillance system has been incorporated. The wireless range is too small. It can be efficient if GPRS, ZigBee module is used for wireless medium. Including object detection method is one of the main future works that needs to be implemented.

VI. REFERENCES

[1] V. Vujovi, M. Maksimovi, "Raspberry Pi as a Sensor Web node for home automation," *Comput. Electr. Eng.*, vol. 44, pp. 153–171, 2014.

[2] S. Jain, A. Vaibhav, and L. Goyal, "Raspberry Pi based Interactive Home Automation System through E-mail LED Switch," no. 2002, pp. 277–280, 2014.

[3] J. Sobota, R. P□sl, P. Balda, and M. Schlegel, "Raspberry pi and arduino boards in control education," *IFAC Proc. Vol.*, vol. 10, no. PART 1, pp. 7–12, 2013.

[4] M. S. Bin Bahrudin, R. A. Kassim, and N. Buniyamin, "Development of Fire alarm system using Raspberry Pi and Arduino Uno," *2013 Int. Conf. Electr. Electron. Syst. Eng. ICEESE 2013*, pp. 43–48, 2013.

[5] K. Krasovitskaya, E. Cherkashin, and S. Gorunchik, "Expert System for Structural Analysis of Electrocardiograms," *Int. Conf. Appl. Internet Inf. Technol.*, pp. 220–230, 2016. [6] "Distributed Control System (DCS) Information | Engineering 360."

[7] "Theory of Robot Control - Google Books."

[8] "Azure Service Bus | Microsoft Azure." [Online].

[9] "Arduino UltraSonic Range Finder: The best interfacing tutorial!"

[10] "How to Change the Direction of Rotation of a DC Motor? | StudyElectrical | Online Electrical Engineering Study Site."

[11] X. Huang and L. Deng, "An overview of modern speech recognition", *Handb.Nat.Lang.*, pp.339–367, 2010.

[12] A. R. Krishna, G. S. Bala, A. Sastry, B. B. Sarma and G. S. Alia, "Design And Implementation Of A Robotic Arm Based On Haptic Technology," International Journal of Engineering Research and Applications (IJERA), vol. 2, no. 3, pp. 3098- 3103, 2012.

[13] A. Abdullah, O. Sidek, N. A. Amran, U. N. Za'bah, F. Nikmat, H. Jafar and M. A. Hadi, "Development of Wireless Sensor Network for Monitoring," 2012, International Conference on Advanced Computer Science and Information Systems.

AUTHOR PROFILE'S

ANUSHA PATNAM doing post-graduation in VLSI and Embedded systems from Siddhartha Institute of Engineering and Technology in Department of Electronics and Communication Engineering.

MRS. N. MALATHI is a research scholar at REVA University, Bangalore. She works as an Assistant Professor at SIET, Hyderabad with almost 15 years of teaching experience. She has guided almost 30 undergraduate projects and 20 post graduate projects. She is a co-author for book in "Embedded systems". Her areas of interest include Microprocessors & Microcontrollers, Soc design & Noc design, VLSI design and embedded systems.

DR. D SUBBA RAO, is a proficient Ph.D person in the research area of wireless communications from Rayalseema University, Kurnool along with initial degrees of Bachelor of Technology in Electronics and Communication Engineering (ECE) from Dr. SGIET, Markapur and Master of Technology in Embedded Systems from SRM University, Chennai. He has 16 years of teaching experience and has published 98 Papers in International Journals, 2 Papers in National Journals and has been noted under 4 International Conferences. He has a fellowship of The Institution of Electronics and Telecommunication Engineers (IETE) along with a Life time membership of Indian Society for Technical Education (ISTE). He is currently bounded as an Associate Professor and is being chaired as Head of the Department for Electronics and Communication Engineering discipline at Siddhartha Institute of Engineering and Technology, Ibrahimpatnam, Hyderabad.