Journal of Engineering Sciences
Vol 11, Issue 1, JAN/2020
ISSN NO:0377-9254

A NEW WEARABLE SENSOR NETWORK SENSING FOR IOT BASED HEALTH MONITORING SYSTEM

[1]D.Kumar, [2]Meenuga Balachandra
[1]Associate Professor,[2]Associate Professor
Department of CSE
Dr.Samuel George Institute of Engineering & Technology, Markapur, India

Abstract: In recent proceedings in IT and communication have led to the birth of a new technology named Internet of Things (IOT) Healthcare is one of the most vital domains that are present today. Healthcare has seen a wide transformation over time. The project uses the KNN algorithm to predict the shape and condition of the sufferer to prevent them from going into further bad state it sends mail to the doctor in a most emergency situation or else in other cases it keeps on updating the sensed values in the web page created. The technology behind this Web of Things is advanced and is efficient solution for connecting the devices to the web and to attach the complete world of things in a network. We propose a new method for ECG monitoring is Cypress Wireless Internet Connectivity for Embedded Devices (WICED) Internet of Things (IoT) platform. ECG data are gathered using a wearable monitoring node and are transmitted directly to the IoT cloud using Wi-Fi. Internet of Things utilizes open source protocols. The main objective of this project is to talk about the problems linked to the usage of wearable and implantable sensors for distributed mobile computing. The experimental results indicate that the presented safety monitoring network works reliably using energy harvesting.

Index Terms: body sensor network, data confidentiality, environmental monitoring, Machine learning, KNN, Emergency, Health monitoring, ECG, Wearable sensors.

1. INTRODUCTION

The life expectancy has been increasing in this world rapidly since the past few years which has drastically raised the number of elderly people living currently [1]. Photo plethysmo gram (PPG), or electrocardiogram (ECG)[2]. In addition to medical signals is deployed to monitor environmental conditions around the human body as well such as in the safety application and environmental monitoring applications [3]. Such a wearable sensor system can also provide invaluable and useful information about the environmental impact on subject's health [4]. Our proposal for the Internet of things in medical environments is based on three pillars to read the temperature and pulse value of the patient using sensors embedded with the patients [5].The buzzer buzzes to indicate that the patient is in an emergency situation to the nurse present in that particular ward [6]. Thing Speak server from devices for creating instant visualizations of live data and sends alert using web services are the embedded IoT devices that are connect to the internet [7]. Accurate ECG monitoring of a patient is possible using low-cost wearable cypress devices is monitored data can be transmitted to the database, linked with the health records of the patient. Statistical inference algorithms can compare this patient's data to a large database of other patients and provide the doctor with a rich set of suggestions [8]. IoT Cloud to provide convenient and timely access to ECG data for users both the HTTP and MQTT servers is deployed in the AWS IoT cloud. AWS IoT is a managed cloud platform connected devices easily and securely interacts with cloud applications and other devices [9].

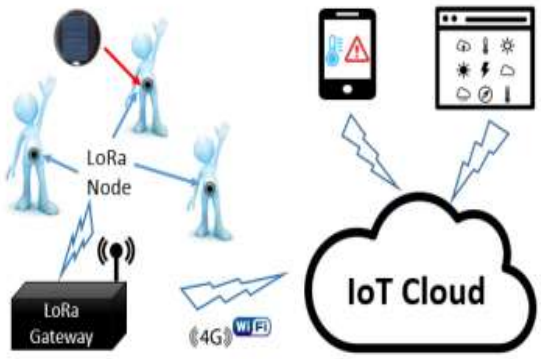

FIGURE 1. The network diagram of wearable sensor network

2. RELATED WORK

The work described wearable environmental sensor network for urban environment monitoring it has seven environmental sensors including infrared temperature sensor, atmospheric pressure, accelerometer, temperature, humidity, ambient light, and inertial measurement unit (IMU) [10]. The rechargeable battery provides the power and Wireless connectivity is achieved by a on-board Wi-Fi module [11]. The conjunction of the Internet of things technology and medical field makes a great impact in the healthcare sector is physical devices network, embedded system, sensor, servers, software and network connectivity to communicate remotely and collect data from the system components [12]. This system contains of remote detection terminal, control master station and mobile monitoring terminal. Gas concentration level is detected by the remote monitoring terminal. Remote sense terminal is used to evaluate environmental conditions and gas concentration level [13]. The ECG data gathered from sensors are transmitted to the IoT cloud via a Bluetooth, Zigbee or Wi-Fi [13]. All the protocols is provide sufficient data rates for transmitting ECG signals with satisfying power consumption. Due to the limited communications ranges of Bluetooth and Zigbee, a smart terminal is usually needed to receive the ECG data and then send the data to the IoT cloud through the Wi-Fi [14].

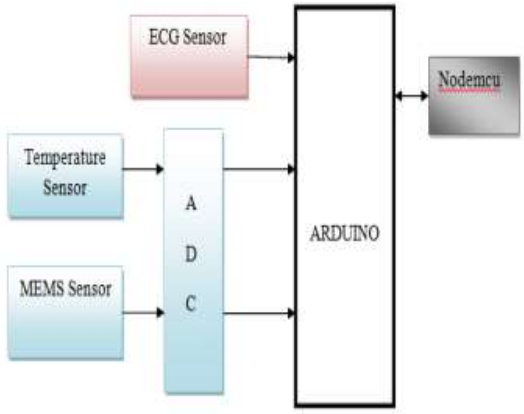

Figure 2. Transmitting Node.

3. SYSTEM ARCHITECTURE

The framework of the advanced technique utilizes IoT to monitoring hazardous environment in real-time applications. The block diagram of the modern poisonous environment monitoring design is explicated Collected sensors data are to be given to the arguing analog inputs [15]. Electronic devices and modules are connected using Wi-Fi technology and to provide smart world through Internet of Things (IoT). The collected information are transfer to anywhere in the world using HTTP protocol and HTML language over the internet [16]. Wearable ECG sensors are used so that it will have little impact on the user daily life. ECG data can be recorded over long hours or even days using these sensors. Then, the ECG signals are processed through a series of amplification and filtering processes to improve the signal quality and to meet the requirements of wireless transmission [17].

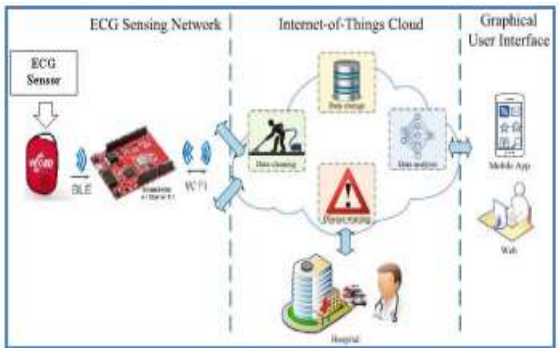

Fig 3. Architecture of the IoT-based ECG Monitoring System

4. PROPOSED SYSTEM

This work aims at designing and implementing a hospital management system using a machine learning algorithm. The physiological parameters of the patients in collected in real time by the sensor network in normal environmental conditions and stores the data in the server where it is predicted by the prediction algorithm it displays the current data in the webpage and it sends signal according to the prediction in case of emergency [18]. We propose a lightweight mysterious validation convention. In this manner to achieve every one of the information security prerequisites we receive OCB verified encryption mode.

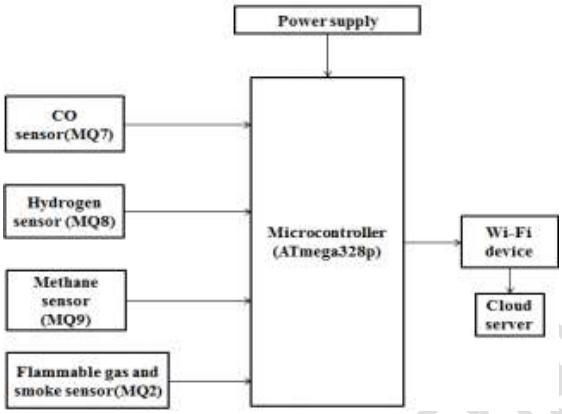

Fig 4. Block diagram of toxic environment monitoring system

A. Threshold Adaptive Algorithm:

Thresholding technique helps in detecting ECG signal. Threshold value increased from low level, till it reaches the desired high level. Whenever ECG signal crosses this threshold value, a QRS complex is detected. To reduce the detection of false beats, after every detected QRS complex, the algorithm performs the automatic threshold level adjustment and noise detection [19].

Algorithm:

Step1: Find maximum absolute value in an interval of t1 = 200 msec after the last detected complex.

Step2: Update threshold value with 0.75 × max [E], where E is the differentiated ECG.

Step3: Decrease threshold value till it reaches predefined value.

Step4: During interval between 200 msec to 240 msec following last QRS detection, if E becomes greater than threshold value then goto

Step5: Else, go to Step1. Step5- Display "noise" is detected. Increase threshold value, recount current R-R interval. Go to,

B. Sensing System

The physiological parameters of the patients in collected in real time by the sensor network in normal environmental conditions and stores the data in the server where it is predicted by the prediction algorithm it displays the current data in the webpage and it sends signal according to the prediction in case of emergency [20].

1. Body temperature sensing: Body temperature is one of the most essential parts of health care services that can say a patient is normal or abnormal. Body temperature is the decisive vital sign in the maintenance in homeostasis. The temperature measurement system is implemented by the sensor (LM35) and the value is converted to the form of Celsius by the analog to digital converter setup.

2. Health status prediction system: Even Though the value collected from the sensor is displayed on the webpage, it will be even more efficient when the system predicts the abnormality of the patient and gives an alert. This is where machine learning becomes more effective in action. KNN algorithm has been used for the prediction of the sensor values collected. KNN algorithm is a simple algorithm and works well in practice. KNN algorithm is a classification supervised algorithm. KNN uses data and classifies the new data points based on the similarity measure. The data is assigned to the class which has the nearest neighbor. It does not have specific training phase because it uses all the training data set

3. Emergency alert system: The predicted data gives the signal to the raspberry pie where a buzzer is connected to it the buzzer cannot work alone it should be connected to a resistor and a controller.

The buzzer has three pins ground, power supply and a value pin, the value pin is connected to the controller and the power supply should be given through the resistor which has1k resistance and the ground is given to the negative pin in the resistor and the controller power supply is given through the raspberry pi and when it gets the signal from the raspberry pi it turns on the buzzer and gives signal to the duty nurse available.

5. IOT BASED ECG MONITORING SYSTEM IMPLEMENTATION

Based on the proposed solution Architecture of IoT-based ECG Monitoring System an IoT-based ECG monitoring system is implemented using the advanced techniques of mobile sensing, cloud computing and Web. Details of the monitoring node, IoT cloud and GUI are explained [21].

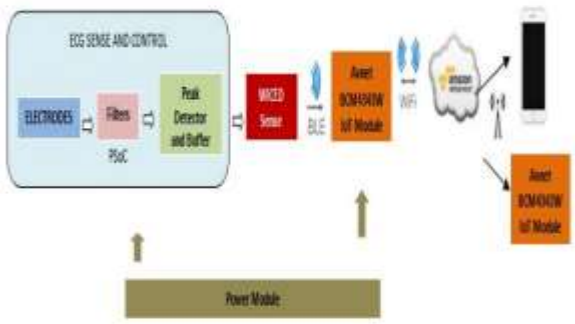

Figure 5: IOT based ECG Monitoring System

ECG Sense and Control node: This node is responsible for collecting ECG signal from the human body and then sending the data to WICED sense module. This node is designed using low power Programmable Systems on Chip (PSoC).

WICED Sense module: WICED sense kit is built by Broadcom BCM20737 SoC. It supports Bluetooth Low Energy (BLE) with wireless charging. Buffered data from ECG sense and Control node is stored on EEPROM of WICED Sense node via USB-UART. Bluetooth low energy technology is used to streams the connected devices information to Internet-based services and applications in limited power usage.

Power Module: PSoC and Avnet IoT module operates on onboard high capacity 5V to 3.3V regulated supply. It can be powered up using AAA or coin cell battery. Hence PSoC's are designed for low power consumption. The power module provides a reliable power supply to each and every module in the ECG monitoring node.

Cloud and End user: Android application connects to IoT Foundation server. MQTT library provides Message Queue, MQTT services Telemetry Transport and light weight messaging protocol. MQTT client open source libraries support for different platforms, like C, C++, Java, JavaScript, and Ruby. Android application do IoT service configuration and registration as MQTT device as explained in Reference

6. EXPERIMENTAL RESULTS

Web of Things based toxic environment observing system is established and different toxic places were monitored. The parameters of the environment to be monitored are chosen as carbon monoxide, methane, hydrogen and flammable gas. The rows in the matrix represent the instances in a predicted class and the columns represent the actual class. It is a type of contingency a matrix format that displays the frequency distribution of the variables, with two dimensions ("actual", "predicted"). In the model proposed here the classification system has been trained to distinguished between "normal, abnormal. Classification accuracy is the percentage of correct predictions. It is for evaluating the classification models. Accuracy is the fraction of predictions the model got right.

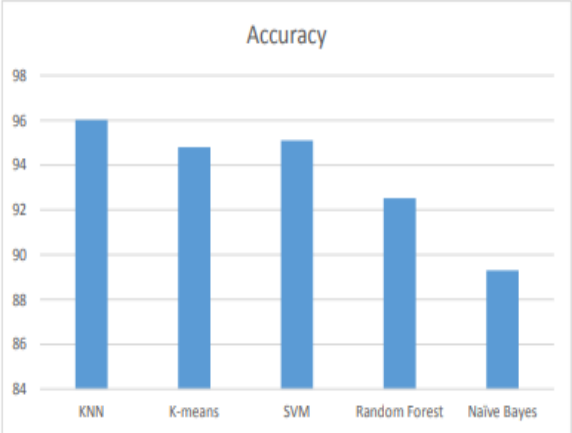

Fig 6: Accuracy comparison depiction

7. CONCLUSION AND FUTURE WORK

In this article, at first we have portrayed the security and the protection issues in social insurance applications utilizing body sensor arrange (BSN). The micro-power manager is able to harvest solar energy from both indoor and outdoor environments to enable a continuous energy supply for the sensor node. The proposed system is efficient to monitoring toxic gases for people safety applications in hazardous places. The various parameters like hydrogen, carbon monoxide, methane and flammable gases were monitored using IoT. The poisonous gases were monitored in fire places, chemical industries and garbage places. Various ECG sensing networks including Wi-Fi, Bluetooth, Zigbee and BLE were introduced and compared. Based on the proposed architecture, an IoT-based ECG monitoring system was implemented. Through a wearable monitoring node with three electrodes, real-time ECG signals can be collected with satisfactory accuracy. Further studies on ECG monitoring are still needed in the future. AWS IoT is a new managed service that enables Internet-connected to easily and securely interact with each other and the cloud. The proposed system can be extended to a mine safety artificial intelligence-based platform for people safety applications.

8. REFERENCES

[1] E. A. Rogers and E. Junga, “Intelligent efficiency technology and market assessment,” 2017.

[2] Schmidt R, Norgall T, Mörsdorf J, Bernhard J, von der Grün T. 2002. Body Area Network BAN--a key infrastructure element for patient-centered medical applications. Biomed Tech. 47.

[3] M. R. Yuce & J. Y. Khan. Wireless Body Area Networks: Technology, Implementation, and Applications. Pan Stanford Publishing.

[4] M. R. Yuce. Implementation of wireless body area networks for healthcare systems. Sensors and Actuators A: Physical. 162.

[5] Garcia P. A Methodology for the Deployment of Sensor Networks IEEE Transactions on Knowledge and Data Engineering.

[6] Lord Kelvin, William. On an Absolute Thermometric Scale. Philosophical Magazine.

[7] Hajati Arman. Three-dimensional micro electromechanical system piezoelectric ultrasound transducer. Applied Physics Letters.

[8] F. Tsow et al., ‘‘A wearable and wireless sensor system for real-time monitoring of toxic environmental volatile organic compounds,’’ IEEE Sensors J., vol. 9, no. 12, pp. 1734–1740, Dec. 2009.

[9] A. Velasco, R. Ferrero, F. Gandino, B. Montrucchio, and M. Rebaudengo, ‘‘A mobile and low-cost system for environmental monitoring: A case study,’’ Sensors, vol. 16, no. 5, p. 710, 2016.

[10] X. Yue et al., ‘‘Development of an indoor photovoltaic energy harvesting module for autonomous sensors in building air quality applications,’’ IEEE Internet Things J., vol. 4, no. 6, pp. 2092–2103, Dec. 2017.

[11] E. M. Compher, M. C. Gupta, W. C. Wilson, and E. I. Madaras, ‘‘Solar powered micrometeorite sensors using indoor ambient light for the international space station,’’ Sol. Energy, vol. 85, no. 9, pp. 1899–1905, Sep. 2011.

[12] Y. He, X. Cheng, W. Peng, and G. L. Stuber, ‘‘A survey of energy harvesting communications: Models and offline optimal policies,’’ IEEE Commun. Mag., vol. 53, no. 6, pp. 79–85, Jun. 2015.

[13] Sarfraz Fayaz Khan, “Health Care Monitoring System in the Internet of Things (a lot) by Using RFID”, 2017 the 6th International Conference on Industrial Technology and Management.

[14] Riitta Mieronkoskia, Iman Azimi, Amir M. Rahmani, Riku Aantaa, Virpi Terava, Pasi Liljeberg, Sanna Salantera, “The Internet of Things for basic nursing care”, International Journal of Nursing Studies 69 (2017) 78–90.

[15] Zhe Yang, Qihao Zhou, Lei Lei, Kan Zheng, Wei Xiang, “An IoT-cloud Based Wearable ECG Monitoring System for Smart Healthcare” Springer, 248:pp 1-11, 2016.

[16] Palattella, M., Dohler, M., Grieco, A., and et al., Internet of Things in the 5G era: Enablers, architecture, and businessmodels". IEEE J. Select. Areas Commun. 34:510–527, 2016.

[17] Hou, L., Zhao, S., Zheng, K., and et al., "Internet of Things cloud: architecture and implementation", Accepted by IEEE Communications Magazine.

[18] Shneiderman, B., and Plaisant, C., "Sharpening analytic focus to cope with big data volume and variety". IEEE Comput. Graph.

[19] Zhang, Y., Chen, M., Mao, S., and et al., "CAP: Community activity prediction based on big data analysis". IEEE Netw. 28:52–57, 2014.

[20] Alonso-Atienza, F., Morgado, E., Fernandez-Martinez, L., and et al., "Detection of life-threatening arrhythmias using feature selection and support vector machines". IEEE Trans. Biomed. Eng. 61:832–840, 2014.

[21] Sharma, H., and Sharma, K., "An algorithm for sleep apnea detection from single-lead ECG using Hermite basis functions". Comput. Biol. Med. 77:116–124, 2016.

Author1:

D.Kumar received B.Tech (CSIT) Degree from JNT University in 2006 and M.Tech (CSE) Degree from JNTUK Kakinada in 2011. He has 08 years of teaching experience. He joined as Assistant Professor in Dr.Samuel George Institute of Engineering & Technology, Markapur, India in 2006. Presently he is working as Associate Professor in CSE Dept. His Interested research areas are Image Processing and Computer Networks. He attended Various National and International Workshops and Conferences.

Author2:

Meenuga Balachandra received B.Tech (IT) Degree from JNTU Kakinada in 2012 and M.Tech (CSE) Degree from JNTU Anantapur in 2016. He has 04 years of teaching experience. He joined as Assistant Professor in Dr.Samuel George Institute of Engineering & Technology, Markapur, India in 2016. Presently he is working as Associate Professor in CSE Dept. His Interested research areas are Data Mining and Computer Networks. He attended Various National and International Workshops and Conferences.