Journal of Engineering Sciences
Vol 11, Issue 1, JAN/2020
ISSN NO:0377-9254

ARDUINO BASED PRODUCT SORTING MACHINE

[1]HIRODE BASWA RAJ, [2]Dr. K. SUDHAKAR REDDY
[1]M.Tech Student , [2]Professor
DEPARTMENT OF MECHANICAL ENGINEERING (MECHATRONICS)
MAHATMA GANDHI INSTITUTE OF TECHNOLOGY, Gandipet, Hyderabad-500075.

ABSTRACT

Sorting systems are used to bridge between production and packaging machinery. Sorting systems are used to sort items based on various criteria so that they can be packaged accordingly. Manual sorting is a time and effort intensive process. Automatic sorting systems allow for fast and efficient sorting of products. To demonstrate the sorting system we develop Arduino based sorting system project that uses pistons with size sensing system powered by Arduino control to achieve this functionality. The system consists of a conveyor belt to carry products from one end to collection baskets. It consists of a proximity sensor to sense the type of product using size (height), the system now utilizes two pistons with piping and control valves to control their operations. The system is powered by Arduino to control the sorting system. Two collection baskets are used to collect samples sorted by the pistons mounted parallel to each one. The Arduino coordinates with sensors and piston valves in order to achieve the desired functionality and demonstrate the fully automated product sorting system.

I. INTRODUCTION

The project aims in designing a system to sort the products. To demonstrate the sorting system, we develop a Arduino based sorting system project that uses valves with height of the product, system powered by controller to achieve this functionality

Sorting systems are used to bridge between production and packaging machinery. Sorting systems are used to sort items based on various criteria so that they can be packaged accordingly. Manual sorting is a time and effort intensive process. Automatic sorting systems allow for fast and efficient sorting of products.

Pneumatic actuators are the devices used for converting pressure energy of compressed air into the mechanical energy to perform useful work. In other words, Actuators are used to perform the task of exerting the required force at the end of the stroke or used to create displacement by the movement of the piston.

The controlling device of the whole system is ARDUINO controller. The system is powered by an Arduino to control the sorting system. Collection baskets are used to collect samples sorted by the pistons mounted parallel to each one. The Arduino with IR sensors and solenoid valves with relays in order to achieve the desired functionality and demonstrate the fully automated product sorting system. The system consists of a conveyor belt to carry products from one end to collection baskets. It consists of IR sensors to sense the type of products according to the height of the product, the system now utilizes two pistons with piping and control valves to control their operations. DC motors are used to move conveyer belt. Pneumatics are used which are connected to solenoids to put force on the object to push them in the basket according to the height of the project.

II. LITERATURE SURVEY

In previous years Automation was expensive and very complex. Today for any industry to survive in the competitive market must go for automation. Large Scale industries which do have huge production afford to go for huge capital investment and opt for automation at various levels. But medium and small scale industries mostly do not go for automation due to huge capital investment. That

means even though medium and small scale industries desires to go for automation are unable adopt it. Low cost Automation (LCA) is one solution to medium and small scale industries.

Machines can perform highly repetitive tasks better than humans. Worker fatigue on assembly lines can result in reduced performance, and cause challenges in maintaining product quality. An employee who has been performing an inspection task over and over again may eventually fail to recognize the color of product. Automating many of the tasks in the industries may help to improve the efficiency of manufacturing system. The purpose of this model is to design and implement a system which automatically separates products based on their color. This machine consists of three parts: conveyor belt, color sensor, and dc motor. The output and input of these parts was interfaced using PIC microcontroller.

To reduce human efforts on mechanical maneuvering different types of sorting machines are being developed. These machines are too costly due to the complexity in the fabrication process. A common requirement in the field of color sorting is that of color sensing and iden Machines can perform highly repetitive tasks better than humans. Worker fatigue on assembly lines can result in reduced performance, and cause challenges in maintaining product quality. An employee who has been performing an inspection task over and over again may eventually fail to recognize the color of product. Automating many of the tasks in the industries may help to improve the efficiency of manufacturing system. The purpose of this model is to design and implement a system which automatically separates products based on their color. This machine consists of three parts: conveyor belt, color sensor, and dc motor. The output and input of these parts was interfaced using PIC microcontroller.

To reduce human efforts on mechanical maneuvering different types of sorting machines are being developed. These machines are too costly due to the complexity in the fabrication process. A common requirement in the field of color sorting is that of color sensing and ident Machines can perform highly repetitive tasks better than humans. Worker fatigue on assembly lines can result in reduced performance, and cause challenges in maintaining product quality. An employee who has been performing an inspection task over and over again may eventually fail to recognize the color of product. Automating many of the tasks in the industries may help to improve the efficiency of manufacturing system. The purpose of this model is to design and implement a system which automatically separates products based on their color. This machine consists of three parts: conveyor belt, color sensor, and dc motor. The output and input of these parts was interfaced using PIC microcontroller.

To reduce human efforts on mechanical maneuvering different types of sorting machines are being developed. These machines are too costly due to the complexity in the fabrication process. A common requirement in the field of color sorting is that of color sensing and identification

This isn't a special idea, for the execution of object sorting machine based on colour, size, weight, etc. The idea has existed for quite a while, after there has been advancement in technology.

Design And Development of Color Sorting Robot Lim Jie Shen*, Irda Hassan [4] –This gave us the knowledge of how a robot is used for the sorting process and no manual help or labor was needed [7].

III. HARDWARE DESCRIPTION

The hardware involved in this project is as follows:

In this chapter the block diagram of the project and design aspect of independent modules are considered. Block diagram is shown in fig: 3.1:

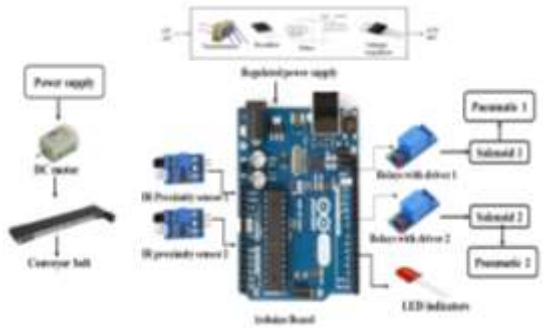

FIG 1: BLOCK DIAGRAM OF ARDUINO BASED PRODUCT SORTING MACHINE

ATMEGA328:

The AVR core combines a rich instruction set with 32 general purpose working registers. All the 32 registers are directly connected to the Arithmetic Logic Unit (ALU), allowing two independent registers to be accessed in one single instruction executed in one clock cycle. The resulting architecture is more code efficient while achieving throughputs up to ten times faster than conventional CISC microcontrollers.

The ATmega48PA/88PA/168PA/328P provides the following features: 4K/8K bytes of In-System Programmable Flash with Read-While-Write capabilities, 256/512/512/1K bytes EEPROM, 512/1K/1K/2K bytes SRAM, 23 general purpose I/O lines, 32 general purpose working registers, three flexible Timer/Counters with compare modes, internal and external interrupts, a serial programmable USART, a byte-oriented 2-wire Serial Interface, an SPI serial port, a 6-channel 10-bit ADC (8 channels in TQFP and QFN/MLF packages), a programmable Watchdog Timer with internal Oscillator, and five software selectable power saving modes. The Idle mode stops the CPU while allowing the SRAM, Timer/Counters, USART, 2-wire Serial Interface, SPI port, and interrupt system to continue functioning. The Power-down mode saves the register contents but freezes the Oscillator, disabling all other chip functions until the next interrupt or hardware reset.

In Power-save mode, the asynchronous timer continues to run, allowing the user to maintain a timer base while the rest of the device is sleeping. The ADC Noise Reduction mode stops the CPU and all I/O modules except asynchronous timer and ADC, to minimize switching noise during ADC conversions. In Standby mode, the crystal/resonator Oscillator is running while the rest of the device is sleeping. This allows very fast start-up combined with low power consumption.

The device is manufactured using Atmel's high density non-volatile memory technology. The On-chip ISP Flash allows the program memory to be reprogrammed In-System through an SPI serial interface, by a conventional non-volatile memory programmer, or by an On-chip Boot program running on the AVR core. The Boot program can use any interface to download the application program in the Application Flash memory. Software in the Boot Flash section will continue to run while the Application Flash section is updated, providing true Read-While-Write operation. By combining an 8-bit RISC CPU with In-System Self-Programmable Flash on a monolithic chip, the Atmel ATmega48PA/88PA/168PA/328P is a powerful microcontroller that provides a highly flexible and cost effective solution to many embedded control applications.

The ATmega48PA/88PA/168PA/328P AVR is supported with a full suite of program and system development tools including: C Compilers, Macro Assemblers, Program Debugger/Simulators, In-Circuit Emulators, and Evaluation kits.

REGULATED POWER SUPPLY:

Power supply is a supply of electrical power. A device or system that supplies electrical or other types of energy to an output load or group of loads is called a power supply unit or PSU. The term is most commonly applied to electrical energy supplies, less often to mechanical ones, and rarely to others.

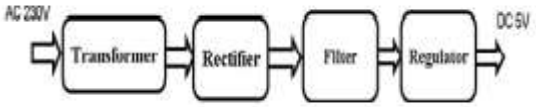

Fig 2: Regulated Power Supply

The basic circuit diagram of a regulated power supply (DC O/P) with led connected as load is shown in fig:

LED:

A light-emitting diode (LED) is a semiconductor light source. LEDs are used as indicator lamps in many devices, and are increasingly used for lighting. Introduced as a practical electronic component in 1962, early LEDs emitted low-intensity red light, but modern versions are available across the visible, ultraviolet and infrared wavelengths, with very high brightness. The internal structure and parts

of a led are shown in figures 3.15 and 3.16 respectively.

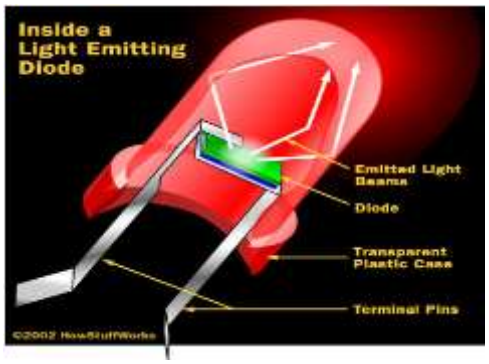

Fig4: Inside a LED

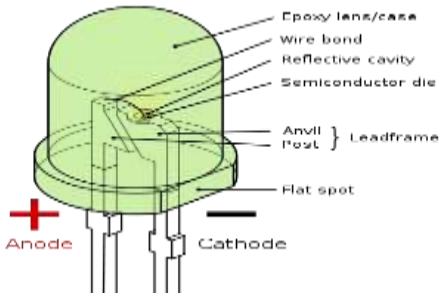

Fig 5: Parts of a LED

IR sensor

An IR proximity sensor works by applying a voltage to a pair of IR light emitting diodes (LED's) which in turn, emit infrared light. This light propagates through the air and once it hits an object it is reflected back towards the sensor. If the object is close, the reflected light will be stronger than if the object is further away.

Infrared (IR) light is electromagnetic radiation with longer wavelengths than those of visible light, extending from the nominal red edge of the visible spectrum at 700 nanometers (nm) to 1 mm. This range of wavelengths corresponds to a frequency range of approximately 430 THz down to 300 GHz,[1] and includes most of the thermal radiation emitted by objects near room temperature. Infrared light is emitted or absorbed by molecules when they change their rotational-vibrational movements. The existence of infrared radiation was first discovered in 1800 by astronomer William Herschel.

IV. ELEMENTS OF INFRARED DETECTION SYSTEM

A typical system for detecting infrared radiation is given in the following block diagram :

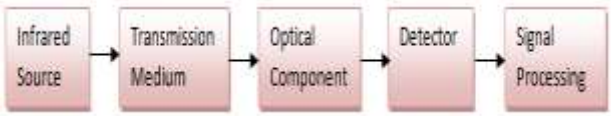

Relay

A **relay** is an electrically operated on/off switch. Many relays are used an electromagnet to operate a switched mechanism, but also different operated principles are also used. Relays find all the applications where it is wanted to control a circuit by low-power signals, or where several circuits can also be controlled by only one signal. That the first relays were used in the far distance telegraph circuit, repeated by the signal coming in from one circuit and re-transmitting it to another circuit. Relays are found extensive uses in telephone exchanges and early computers to perform logical operations. A type of relay that can be handled the high power required to directly drive an electric motor is called a contactor. Solid-state relays are controlled power circuits with no moving parts, which are used instead of a semiconductor device triggered by light to perform the switch. Relays which are calibrated with operating characteristics and sometimes multiple operating coils are used to protect electrical circuits from overload or faults; in the modern electric power systems these functions are performed by the digital instruments still called "protection relays".

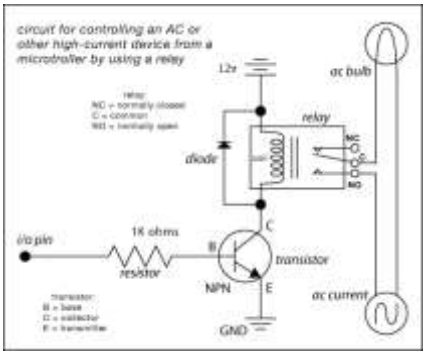

FIGURE 6: SIMPLE CONSTRUCTION OF RELAY

Relay Driver:

The current needed to operate the relay coil is more than can be supplied by most chips (op. amps etc), as shown in the diagram below, so a transistor is usually needed.

Use BC109C or similar. A resistor of about 4k7 might be alright. The diode is wanted to short circuit the high voltage "back emf" induced when current flowing through the coil is suddenly switched off.

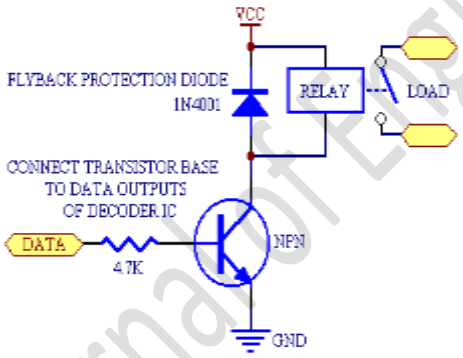

Relay Driver

DC motor

A dc motor uses electrical energy to produce mechanical energy, very typically through the interaction of magnetic fields and current-carrying conductors. The reverse process, producing electrical energy from mechanical energy, is accomplished by an alternator, generator or dynamo. Many types of electric motors can be run as generators, and vice versa. The input of a DC motor is current/voltage and its output is torque (speed).

DC Motor

The DC motor has two basic parts: the rotating part that is called the armature and the stationary part that includes coils of wire called the field coils. The stationary part is also called the stator. Figure shows a picture of a typical DC motor, Figure shows a picture of a DC armature, and Fig shows a picture of a typical stator. From the picture you can see the armature is made of coils of wire wrapped around the core, and the core has an extended shaft that rotates on bearings. You should also notice that the ends of each coil of wire on the armature are terminated at one end of the armature. The termination points are called the commutator, and this is where the brushes make electrical contact to bring electrical current from the stationary part to the rotating part of the machine.

Operation:

The DC motor you will find in modem industrial applications operates very similarly to the simple DC motor described earlier in this chapter. Figure 12-9 shows an electrical diagram of a simple DC motor. Notice that the DC voltage is applied directly to the field winding and the brushes. The armature and the field are both shown as a coil of wire. In later diagrams, a field resistor will be added in series with the field to control the motor speed. When voltage is applied to the motor, current begins to flow through the field coil from the negative terminal to the positive terminal. This sets up a strong magnetic field in the field winding. Current also begins to flow through the brushes into a commutator segment and then through an armature coil. The current continues to flow through the coil back to the brush that is attached to other end of the coil and returns to the DC power source. The current flowing

in the armature coil sets up a strong magnetic field in the armature.

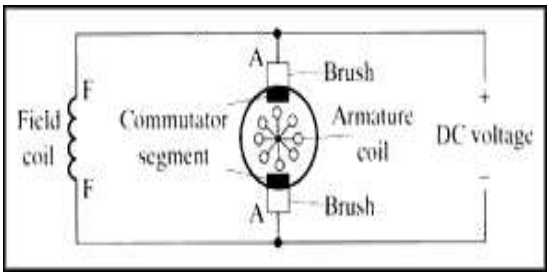

Fig 7: Simple electrical diagram of DC motor

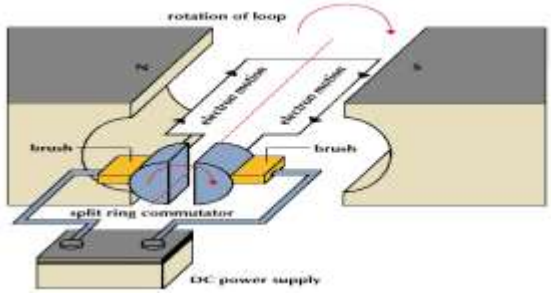

Fig 8: Operation of a DC Motor

PULSE WIDTH MODULATION (PWM):

Pulse-width modulation (PWM), or **pulse-duration modulation (PDM)**, is a commonly used technique for controlling power to inertial electrical devices, made practical by modern electronic power switches.

The average value of voltage (and current) fed to the load is controlled by turning the switch between supply and load on and off at a fast pace. The longer the switch is on compared to the off periods, the higher the power supplied to the load is.

The PWM switching frequency has to be much faster than what would affect the load, which is to say the device that uses the power. Typically switching have to be done several times a minute in an electric stove, 120 Hz in a lamp dimmer, from few kilohertz (kHz) to tens of kHz for a motor drive and well into the tens or hundreds of kHz in audio amplifiers and computer power supplies.

The term duty cycle describes the proportion of 'on' time to the regular interval or 'period' of time; a low duty cycle corresponds to low power, because the power is off for most of the time. Duty cycle is expressed in percent, 100% being fully on.

V. PROJECT DESCRIPTION

In this chapter, schematic diagram and interfacing of Arduino microcontroller with each module is considered.

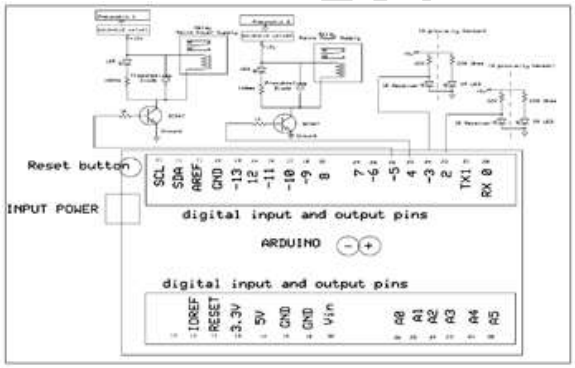

Fig 9: schematic diagram of Arduino Based Product Sorting Machine

Applications:

1. Brick Manufacturing Process

2. Luggage sorting at Airports

3. Quality Checking of Solid Objects

4. In Food Processing Industries

VI. RESULT

We have developed a sorting machine using Arduino for automatic product sorting, taking into consideration the height of the products. In this project the machine designed to sort two different sized products with height of 25mm and 50mm. the machine can able to sort for different size also depending upon the requirement.

VII. CONCLUSION

Integrating features of all the hardware components used have been developed in it. Presence of every module has been reasoned out and placed carefully, thus contributing to the best working of the unit. Secondly, using highly advanced IC's with the help of growing technology, the project has been successfully implemented. Thus the project has been successfully designed and tested.

VIII. FUTURE SCOPE

Our project **Arduino Based Product Sorting Machine** is to design a system to sort the products. To demonstrate the sorting system, we develop a Arduino based sorting system project that uses valves with height of the project system powered by controller to achieve this functionality.

The project can be improved by following:

Using high quality sensor like Laser sensor we can increase the speed of the process. Objects are sorted we can distinguish it easily by improving extra circuitry. It is also economical. This system can be used to sort more than one Object in one cycle by suitably altering the hardware and software of the system. This project can also modified to sort the products based on color and metal detection with minimal hardware changes and capital investment.

In future, instead of the Arduino microcontroller, we can use the Raspberry Pi 3 processor to speed up the process.

XI. REFERENCES

[1]. Automated object sorting using Raspberry PiN.Aarthi1,P.Sahithi2,P.V.Sitaramaih3,M.Indu Vardhani4, N. Ranjith Kumar5,D. Suneel Varma61,2,3,4,5,6(Electronics and Communication Engineering, Bapatla Engineering College(Autonomous),Acharaya Nagarjuna University, India)

[2]. Sorting of Objects Based on Colour, Weight and Type on AConveyor Line Using PLCS. V. Rautu, A. P. Shinde, N. R. Darda, A. V.Vaghule, C. B.Meshram, S.S.Sarawade (Department of Mechanical Engineering, M.E.S. College of Engineering, Pune, S.P. Pune University, India).

[3]. Machine Vision Based Automated Object Sorter Using Digital Image Processing MATLAB1Shalu Chopra, 2Ritu Kadyan 1Student of Master Technology,2 Assistant professor 1GangaTechnical Campus, Jhajjar,Haryana,India

[4]. Reddy, D.K., 2014. Sorting of Objects Based on Colour By pick And Place Robotic Arm and with Conveyor Belt Arrangement. Int. J. Mech. Eng. & Rob.Res, 3(1)

[5]. Rinchen G. Dorjee, "PLC and Fuzzy Logic Control of a Variable Frequency Drive,"International journal of engineering trends and technology, Vol. 16, No. 4, Oct 2014, 2231-5381.

[6]. Sadegh vosough, Amir vosough, "PLC and its Applications," International journal of Multidisciplinary sciences and engineering, Vol. 2, No. 8, Nov. 2011, 2045-7057.

[7]. S. Das, S. Dutta, A. Sarkar, S. Kar, "Recognition and Disposal of Faulty Bottles in a Bottle Filling Industry Using PLC and Producing Human Machine Interface by SCADA", International Refereed Journal of Engineering and Science (IRJES), pp. 18-23, ISSN 2319-183X, Volume 3, Issue 5, May 2014

[8]. K. Ali, R. Ghoni, A. N. Abdalla, "Advanced Control of Hybrid-PLC System", International conference on modelling optimization and computing, pp. 218-225, ISSN 1877-7058, June 2012.

[9]. Ma Shuying, C. Lidong, Shi Lei, Liu Shengtao, Z. Liang, L. Shiguang, "Design of the temperature control system of solar cell lamination machine", IEEE, pp. 506-509, Vol. 3, 2010.

[10]. MariaG.Ioannides,"Designand Implementation of PLC-Based Monitoring Control System for Induction Motor", IEEE transactions on energy conversion, pp. 469-476, ISSN 0885-8969, Vol. 19, No. 3, Sept. 2004.

[11]. V. Vikash and H.J. Amarendra, PLC Based Sensor Operated Obstacle Detection Carriage Vehicle, International Journal of Applied

Engineering Research ISSN 0973-4562 Volume 9, Issue 7 (2014) pp. 847-851.

[12]. Jing Dai, "The Design of Automatic Temperature Control System for the Dyeing Machine", Modern applied science, pp. 72-79, Vol. 2, No. 5, Sept. 2008.