Journal of Engineering Sciences
Vol 11, Issue 2, FEB /2020
ISSN NO:0377-9254

HIGH LEVEL WING

SASIDHARAN D[1], DR.M.VARATHARAJ[2], P. MYTHILI [3] R. SANDHIYA[4]
A. CHANDRU[5] I. DHINESH KUMAR[6]
ASSISTANT PROFESSOR[1], ASSOCIATE PROFESSOR[2], UG STUDENTS[3,4,5,6]
DEPARTMENT OF ELEECTRONICS AND COMMUNICATION ENGINEERING,
KATHIR COLLEGE OF ENGINEERING, COIMBATORE, TAMILNADU 641062.
*Corresponding author: Email id[1]: sasidharanduraisamy@gmail.com

Abstract: ***The main focus of this project is to develop and design the mechanism of high level wing for lifting. It is controlled by an Arduino Uno microcontroller which accepts the input data's from the user. This high level wing working prototype is made up of a motor, camera accessed by ip webcam, gripper with a two relays and a Arduino board. These are connected together and are operated by ubidots software. In line with the human hand motion robotic arm additionally circulate and reacts the same. This will be accomplished from anywhere, we decided to overcome the positive difficulty approach by means of accessing the arm using an external joystick, in order that it is far easier than the preceding method. By the usage of the camera we able to stumble on the goal speedy and it enable to attain the target with the aid of the usage of this arm that is managed externally via a person. As machines develop even greater sensible, they're emerging no longer simply as a effective tools, but close companion. The control assignment of this is to govern the movement of robot arm from source to the destination spot. This could be done by the way of controllers within the Arduino which include certain specifications***

Keywords: ***Gripper, Stepper Motor, WEMOSD1, RF Module, Wi-Fi Module.***

1. INTRODUCTION

Robotics may be a current emerging technology within the field of science. A number of universities in the world are working in this field. Robotics is that the new emerging booming field, which can be of great use to society in the upcoming years. Nowadays many sorts of wireless robots are being developed and are put to varied applications and uses.

The developed robotic arm, with learning and resources, which is operated & controlled wirelessly with the help of accelerometers which uses Rf module to transmits signals to the robot through an auto device manually through the hand and leg movement [3]. The Robot moves and acts in the manner depending on the gestures made by the hand and leg. The robot moves in up, down, left or right directions and picks up objects from one place and keeps at another desired place as directed by the movements of human. It is a TYPE — C Robot, servo controlled with continuous or point to point trajectories. The pre-defined arm are working in the form of wrapping a detectors in the arm of a human being [3].

By discussing the brand new frontiers of robot physical interplay with people, describing motivations and packages of safe pHRI (bodily human-robot interplay). The technical challenges to increase new robot structures for secure and powerful collaboration with people are mentioned, Sub-dividing the exposition into palms-off and fingers-on pHRI (physical human-robot interaction) systems [9]. We present a summary of the applicable safety standards and their ongoing development. It can be very useful when the arm is controlled externally, so that it can be make the movements according to the need and by using this technique it can make the needful for the human beings [3]. This can be done with the help of the Arduino boards connected to the hands which are programmed in order to do the favor. Hence, with the use of this, the desired result can be obtained. To make the life better than creating a modern world, we make use of the technology to develop the nation as well as the life of a being.

2. LITERATURE SURVEY

In the wireless gesture technique, microcontrollers accelerometers, degree of freedom, IP, RF modules are used. One accelerometer is mounted on the human hand and another on a leg from which the arm can be moved according to the movement of the human hand and leg, where hand movement captures the behavior and leg movement shows the platform movement

of the robotic arm. Here, various related works has been taken as they are vision gesture recognition, motion capture sensor, accelerometer based gesture recognition. Microcontroller acts as a controlling unit in which all the components are connected. Two microcontrollers are there, one is at transmitting end and the other at the receiving end. The RF module works on 315Hz frequency with an operating range of 400-500 meters where Rf signals can be transmitted and received. Accelerometers used here is ADXL3xx which has two axes x and y. Camera is connected in the arm which can be accessed with the IP based systems through mobile phones. This design works according to the movement of our hand and leg through the signal from accelerometer and these are controlled by the microcontroller so that the gripper works and do actions .

3. PROPOSED METHOD

The high level wing replaces the usage of accelerators, RF module and microcontrollers. Here, the gripper is connected to a motor which operates the movement of it. The Arduino WEMOSD1 is used as a controlling unit, by programing the kit and according to the given instruction the gripper works. The camera can be accessed with the Wi-Fi connection in the Arduino itself. The IP webcam software is used to access the camera of a mobile phone through the server. The motor is connected with a two relay switches which decides the movement of the gripper. The Arduino here acts as a controlling unit where all are connected and programmed in order to make the movements. The motor movement can be given through the UBIDOTS software which has two slots one is for forward and backward movement then the other is for open and closing of the gripper which can pick and place the objects. From the gripper we can pick and place an object from one place to other where human cannot directly work.

A block diagram is used to describe the design of the robotic arm. Fig 1: shows the Block diagram.

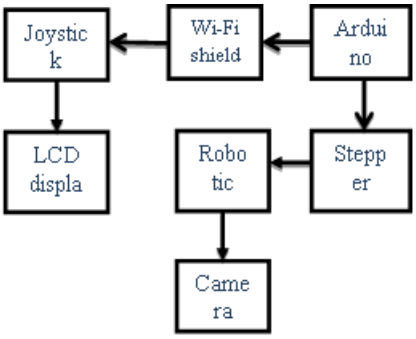

Fig. 1. Block Diagram of Robotic Arm

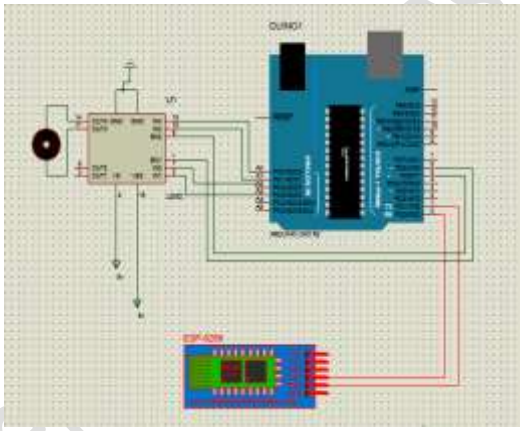

Fig 2: Schematic of Arm the Robotic

This will be effective than the reference since, the gripper can be operated through a software not by our movement through accelerometers. The technique has overcome the accelerometer actions and all degree of freedom which took more delay in processing the gripper. The designed high level wing in Order to reduce the loss of signals through RF module which sends Rf signal through the transmitter and gets at the receiver. During this transmission there may be a chance of losing the signal which causes delay in the gripper movement at the time. This makes a delay in the process. These all can be reduced in the high level wing technique which is easy to access than all other methods. By the use of the camera used to get the live video of the space through the wireless connection with the help of an IP webcam. It can be viewed through a laptop. So that, the gripper is instructed to the respected place for its movement.

3.1. High Level Wing

It works according to the user input and it can manage all the activities done with the system.

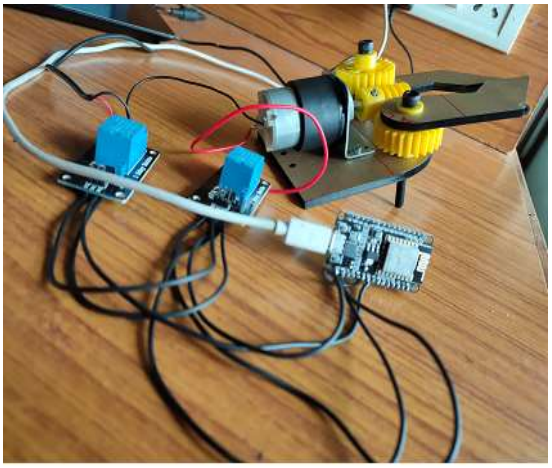

Fig. 2.Working Prototype

The high level wing can be designed for securing the life of human. This report deals with arm is to imitate the movement of a person's arm using accelerometers as sensors for the info acquisition of the natural arm movements. The arm is setup with a servo and stepper motor, the servo motor is used to get the shape, size of an object so that the object can be taken without trashing it, generally it is used to pick and place an object. The stepper motor is used for the movement of the arm to reach the target from the source, the movement is decided by the user through the joystick. A camera is placed at the top of the arm, it helps us to get the view of an object and its condition, and with the help of this we can get the objects image. Here, by using Arduino board since the programming can be easily analyzed. Since, this is done with IOT, Wi-Fi module is connected so that the object can be identifying easily. Joystick is the one used for accessing the hand externally; by the use of this the robotic hand can get inputs from it and move according to it. The LCD display helps us to view the objects image which is captured by the camera. Hence with the help of this setup it can able to secure the life of a human.

3.2. Experimental Setup

In constructing our arm, it made use of three stepper motors and gears since our structure may be a three dimensional structure. There is a stepper motor at the bottom, which allows for circular movement of the entire structure, another at the shoulder which allows for upward and downward movement of the arm; while the last stepper motor at the wrist allows for the picking of human.

This system has two main parts which are the robotic arm and joystick. In this project, the Arduino Uno act as the controller of the whole system. Arduino Uno will interface to the Wi-Fi via an Arduino Wi-Fi shield. Arduino Wi-Fi shield will enable the Arduino Uno to interconnect to the robotic arm via Wi-Fi. Then, any mobile that has Wi-Fi can access and control the robotic arm.

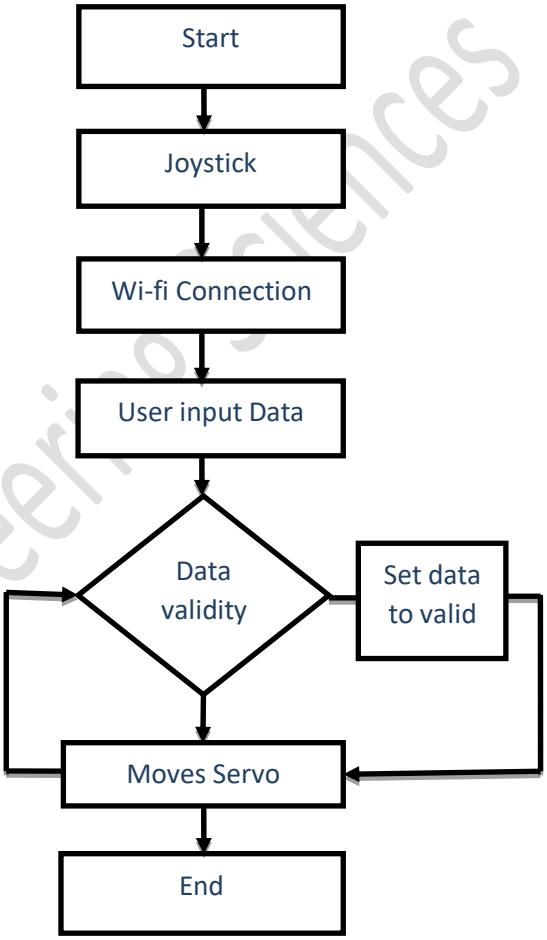

Fig. 3 Flow chart of the wing

4. RESULT ANALYSIS

The joystick, Wi-Fi shield, LCD display, WEOS D1 Arduino, stepper motor, robotic arm, and the camera devices are connected accordingly to hire the object in trouble. By the speed of the motor, the working can be defined in an efficient manner.

The robot operates within a regulated area. This is ensured by the use of the external joystick or the mobile phone software from which input can be given that makes the movement of the arm. The recognition process uses point structures on a

surface of the object as a model [10]. The results vary slightly with different takes. The servo motors rotation contrasts marginally as they are not absolutely precise. However, with several numbers continuous experiments the outcomes do achieve consistency. The analysis shows the percentage success rates of various materials that are handled by the robotic arm and the overall output rate can also be represented by the bar graph analysis.

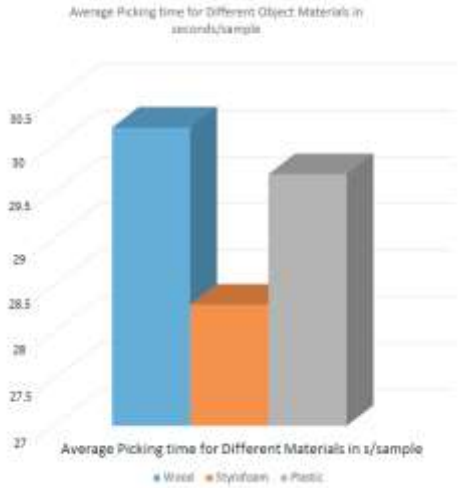

Fig. 4 Picking success rate comparisons

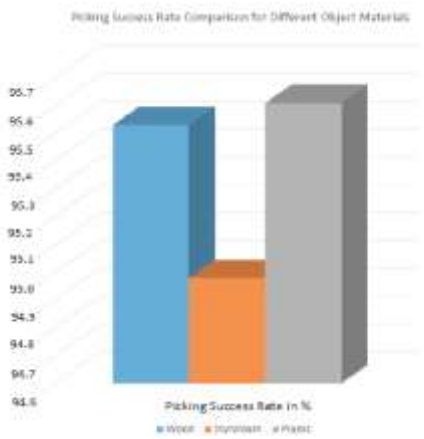

Fig.5 Picking Success rate for different materials

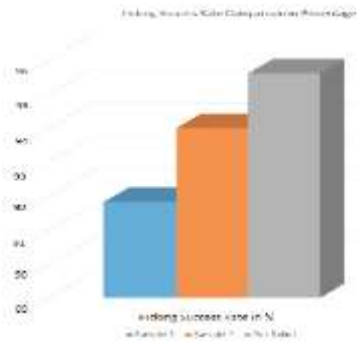

Fig. 6 Picking success rate comparisons

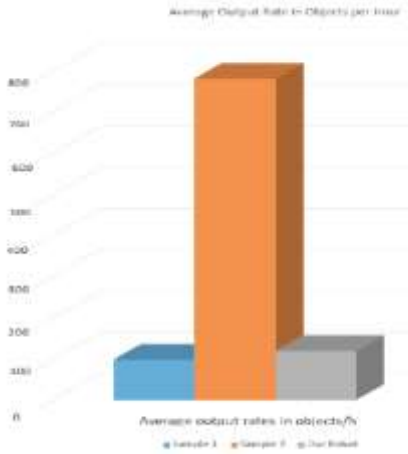

Fig. 7 Average output rate

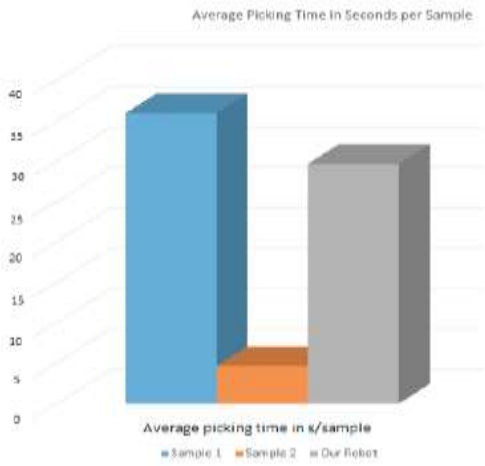

Fig. 8 Average picking time for different materials

5. CONCLUSION

From the analyses made, It's clearly shown that controlling a servo motor is quiet easy and the output is accurate .Thus, it is the right choice to use servo motor for the actuator of the robot arm. The purpose of this project is to show that robots not

only restricted to industrial usage but also suitable for safety standards. Here proved that robots can be controlled via joystick and it is suitable for safety standards. Therefore, as an automated robot with the ability to sort objects the “Robotic Arm” will be a valuable addition to industrial robotics.

REFERENCE

[1] Li Bin-Bin, Zhu Jin-Hvi, Min Hua-Qing, "Bmp: A Self-Balancing Mobile Platform", Proceedings of the 2012 International Conference on Machine Learning and Cybernetics, pp. 868-874, July.

[2] Denysyuk Pavlo, Teslyuk Taras, "Main Algorithm of Mobile Robot System Based on the Microcontroller Arduino", XVIII International Seminar/Workshop on Direct and Inverse Problems of Electromagnetic and Acoustiv Wave Theory (DIPED), Sept.

[3] Love Aggarwal, Vamika Gaur, Puneet Verma “design and implementation of a wireless gesture controlled robotic arm with vision”, vol.79, pp. 0975-8887, October 2013.

[4] Feng Tao, Liu Tao, Wang Xu, Xu Zhao, Zhang Meng, Han Sheng-chao, "Modeling and Implementation of Two-wheel Self-balancing Robot Equipped With Supporting Arms", 6th IEEE Conference on Industrial Electronics and Applications (ICIEA), pp. 713-718, June.

[5] Higa Hiroki, Soken Takashi, Uehara Hideyuki, "A Mobile Robotic Arm for People with Severe Disabilities", Informatics in Control Automation and Robotics Lecture Notes in Electrical Engineering Springer Berlin Heidelberg, vol. 133, pp. 119-122, 2012.

[6] H. S. Yoon, J. Soh, Y. J. Bae and H. S. Yang, “Hand gesture recognition using combined features of location,
Angle and velocity”, Pattern Recognition, vol. 34, (2001), pp. 1491-1501.

[7] N. Liu, B. Lovel and P. Kootsookos, “Evaluation of hmm training algorithms for letter hand gesture recognition”, Proc. IEEE Int’l Symp. On Signal Processing and Information Technology, Darmstadt, Germany, (2003), pp. 648-651.

[8] X. Deyou, “A Network Approach for Hand Gesture Recognition in Virtual Reality Driving Training System of
SPG”, ICPR Conference, Hong Kong, China, (2006), pp. 519-522.

[9] Lee, H., Lee, B., Kim, W. et al. Human-robot cooperative control based on pHRI (Physical Human-Robot Interaction) of exoskeleton robot for a human upper extremity. Int. J. Precis. Eng. Manuf. 13, 985–992 (2012)

[10] Won-Bum Lee, Sang-Duck Lee, Jae-Bok Song. : Design of a 6-DOF collaborative robot arm with counterbalance mechanisms, Robotics and Automation (ICRA), 2017 IEEE International Conference, IEEE, Singapore, Singapore (2017).