Journal of Engineering Sciences

Vol 11, Issue 2, FEB/2020
ISSN NO:0377-9254

WIRELESS SENSOR NETWORK SYSTEM USING RASPBERRY PI AND ZIGBEE FOR BUILDING MONITORING APPLICATIONS

1st G.Susmitha
Dept of ECE
Assistant professor
Samskruti inst of engg and technology
Ghatkesar

2nd Dr. K. Naveen Kumar,
Profesor,
Marri Laxman Reddy Institute
Of Tech & Management,
Dundigal, Medchal

3rd B.Sravanthi
Dept of ECE
Assistant professor
Samskruti inst of engg and technology
Ghatkesar

4rth Ch. Mani kumar
Dept of ECE
Assistant professor
Samskruti inst of engg and technology
Ghatkesar

5th P.Sumanya
dept of ece
Assistant professor
samskruti inst of engg and technology
Ghatkesar

***Abstract*— With over a decade of intensive research and development, wireless sensor network (WSN) technology has been emerging as a feasible solution to many innovative applications. In this paper, we describe a wireless sensor network system that we have developed using open-source hardware platforms, Raspberry Pi and zigbee. The system is low-cost, low power consuming and highly scalable both in terms of the type of sensors and the number of sensor nodes, which makes it well suited for a wide variety of applications related to environmental monitoring. Raspberry Pi is cheap, flexible, fully customizable and programmable small computer embedded linux board and abilities of its usage as WSN node and sensor node. Raspberry Pi works as a base station which connects the sensor nodes via zigbee protocol in the wireless sensor network and collects sensors data from different sensors, and supply multi-clients services including data display. The client can visit the base station remotely via (website) Ethernet or command console.**

***Keywords*— Wireless Sensor Network; Raspberry Pi; Zigbee; Base station; Sensor Node.**

I. INTRODUCTION

With over a decade of intensive research and development, wireless sensor network technology has been emerging as a feasible solution to many innovative applications. Wireless sensor network (WSN) is a low cost wireless network made up of thousands of smart sensor nodes which cooperatively monitor physical or environmental conditions, such as temperature, vibration, pressure, motion, moisture, light, or pollution at different location. These smart sensors constitute a network topology through self-organization [1]. The sensors nodes can transmit the data detected by their own sensor and can also pass the data to the adjacent nodes. The data that detected by sensor nodes can be transmitted to base station using the way of multi-hop.

According to the statistics information or survey, most of the early testbed systems have been built using early stage sensor network research platforms such as CrossBow motes and TinyOS software framework [2][3]. The sensor network hardware platforms are basically low-power embedded microcontroller systems with some onboard sensors andanalog I/O ports to connect sensors. Like hardware, software should also be developed, including OS, sensor/hardware drivers, networking protocols and application-specific sensing and processing algorithms. So, there are a large number of prior efforts in building wireless sensor network systems in the literature. MoteLab [3] was an experimental wireless sensor network deployed at Harvard University. We have witnessed a new wave of developments in open-source hardware/software, standardization, and commercialization of wireless sensor network technologies. In this paper, we used open source raspberry pi embedded linux board which works on open source linux operating platforms [4] [5]. Raspberry pi is used as a base station in this paper which connects the WSN and other networks. The data that can be detected or sensed by sensor nodes is transmitted to the base station using the way of multihop and then transmit/view that data to/by the end user or clients by external network (internet etc.). It can also send command of end user to sensor or network node. The IEEE 802.15.4 standard specifies the physical and medium access control layers for low data-rate wireless networks [6] [7]. ZigBee is the communication protocol which is specifically designed for wireless sensor network which is built upon IEEE 802.15; it is a simple, efficient, reliable, and low cost, low-power standard of wireless technology [8]. For example, the DigiXBee series modules implement the IEEE 802.15.4 radio and ZigBee networking protocol [9]. So, wireless sensor network with zigbee protocol have broad application prospect. In this paper, we present a wireless sensor network system developed using open-source hardware/software platforms, Raspberry Pi and the ZigBee module, XBee S2B. Such a design has the advantages of low cost, easy to build, and easy to maintain, as compared to some earlier designs such as the Texas Environmental Observatory (TEO) system as described by Yang et al [2].

The rest of the paper is organized as follows. In Section II, the overall system architecture is described. Then, in Section III, the design of base station is presented in details. In section IV, the design of the sensor node is presented in details. Some experimental setup and results are presented in Section V. Finally, the paper is concluded in Section VI.

II. The Overall System Architecture

Wireless senor network system requires development and integration of many hardware and software components. Figure 1 shows the overall system architecture of environmental monitoring WSN system [10]. This system consists of raspberry pi as a base station, number of distributed wireless sensor nodes, zigbee protocol. Raspberry pi manages multiple sensor nodes. Each sensor node is combination of sensors, microcontroller and zigbee radio transceiver (Xbee module). Sensor node is primarily responsible for information or sensor data collection and distribution. In addition, there is user application program on each sensor node which handles data from sensors in a certain well defined manner and communication with base station.

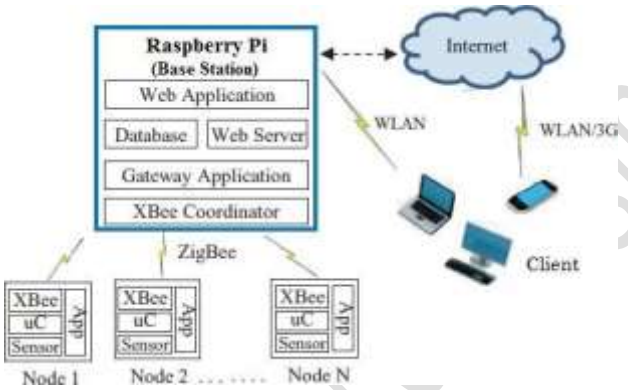

Fig. 1. The Overall System Architecture

In this system architecture, we have combined the gateway node of wireless sensor network, database server, and web server in one single-board computer (raspberry pi) hardware platform, which helps to reduce the cost and complexity of deployment. A web application is developed to provide users a convenient web interface to the system [10] [11]. End Users or clients can interact with the web application within the local area network or from any terminal on the Internet to access the sensor data or perform remote configuration and management of deployed sensor nodes. As compared to the large scale TEO environmental system [2] that has developed earlier, the presented system design in this paper is well suited for small-scale environmental monitoring and data collection applications.

A. Raspberry Pi

The raspberry pi is a low cost, low power credit size single board computer which has recently become very popular [4] [5]. The raspberry pi is the cheapest ARM11 powered Linux operating system capable single board computer board. This board runs an ARM11 microcontroller @700MHz and comes with a 512 Mega Bytes of RAM memory [12] [13]. In this paper, raspberry pi B+ model [5] is used as shown in figure 2, as this model has better specifications as compared to other raspberry pi models. Itsupports a number of operating systems including a Debian-based Linux distro, Raspbian which is recommended by raspberry pi foundation, which is used in our design [4] [5]. Raspberry Pi can be connected to a local area network through Ethernet cable or USB Wi-Fi adapter, and then it can be accessed by more than one client from anywhere in the world through SSH remote login or by putty software by just putting raspberry pi ip address in it. The raspberry pi is booted by external SD or micro SD card.

Fig. 2. Raspberry Pi

B. Zigbee Standard

ZigBee is a specification for a suite of high-level communication protocols used to create wireless networks built from small, low-power digital radios. ZigBee is based on an IEEE 802.15.4 standard. It is a simple, efficient, reliable, and low cost, low-power standard of wireless technology. Though its low power consumption limits transmission distances to 10–100 meters line-of-sight, depending on power output and environmental characteristics, ZigBee devices can transmit data over long distances by passing data through a mesh network of intermediate devices to reach more distant ones. ZigBee is typically used in low data rate applications that require long battery life and secure networking (ZigBee networks are secured by 128 bit symmetric encryption keys.) ZigBee has a defined rate of 250 Kbit/s, best suited for intermittent data transmissions from a sensor or input device [8]. The technology defined by the ZigBee specification is intended to be simpler and less expensive than other wireless personal area networks (WPANs), such as Bluetooth or Wi-

Fi [14]. For example DigiXbee series modules S1 and S2 implement the IEEE 802.15.4 radio and ZigBee networking protocol [9]. Here we used XBee series module S2 from Digi international which fully implement Zigbee protocol. XBee series S2 module also covers more area than XBee S1 module.

XBee functions can be divided by network topology in different ways including the coordinator, router and end device. For wireless network of ZigBee, it will consist of at least two nodes including coordinator node and sensor node types (Router/End device) to be able to communicate and work in PAN (Personal Area network). Wireless sensor network topology is divided into 3 topologies: star topology, cluster tree topology, and mesh Topology [14]. We workedon mesh network topology which is a type of network topology in which a device (node) transmits its own data aswell as serves as a relay for other nodes. In the event of a hardware failure, many routes are available to continue the network communication process. Mesh networks are regularly distributed networks that generally allow transmission only to a node's nearest neighbors. The XBee module supports both transparent (AT) and application programming interface (API) serial interfaces. With the AT mode, the XBee module behaves as a serial line replacement. With the API mode, all data entering and leaving the module is contained in frames that define operations or events within the module. The API mode is required when the network needs to be formed into a multi-node mesh or tree topology [15].

III. Design of Base Station

Raspberry pi acts as a base station which connects to sensor nodes by zigbee communication protocol and clients by external network (internet etc.). For wireless communication and multihop networking protocol, we used XBee series module S2 from Digi international. Xbee module is configured as coordinator on the raspberry pi. Raspberry pi can be connected to XBee module directly through USB cable and also by UART serial communication interface shown in figure 3.

As XBee module can be configured into three types of devices: coordinator, router, and end device. Coordinator has the capability to control the entire network. The base station also acts as a gateway in this application. The data collected or detected by sensor node sends to the base station and inserts the data received from sensor nodes into MySql database of raspberry pi. Multiple users can access the raspberry pi through Ethernet or Wi-Fi connection within local area network or from anywhere on the internet. The functional block diagram of raspberry pi is shown in figure 4.

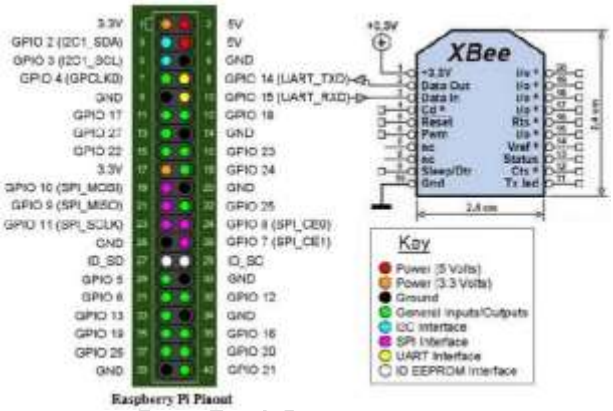

Fig. 3. Interfacing between Raspberry Pi and XBee

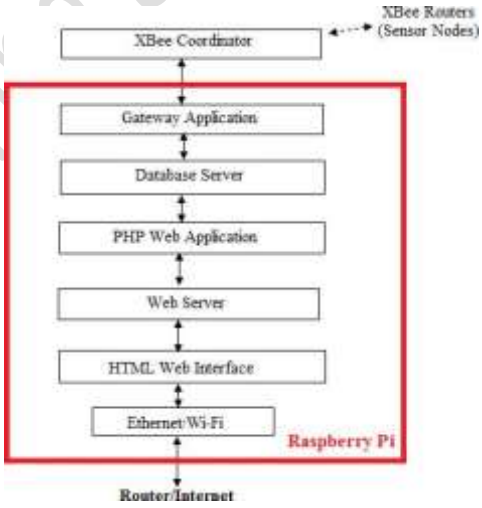

Fig. 4. Functional Block Diagram of Base Station

IV. Design of Sensor Node

In this work, we choose AVR core microcontroller ATMEGA324PA as main control chip of the sensor node. This chip is a high performance, low power AVR 8 bit microcontroller. This chip has a 32 KB in system self-programmable flash program memory, 1KB EEPROM, 2KB internal SRAM, two 16 bit timer, programmable watchdog timer,8 channel 10-bit ADC, master/slave interface and 32 programmable I/O lines, so it is possible to connect a number of sensors sensor node board. The block diagram of sensor node is shown in figure 5.

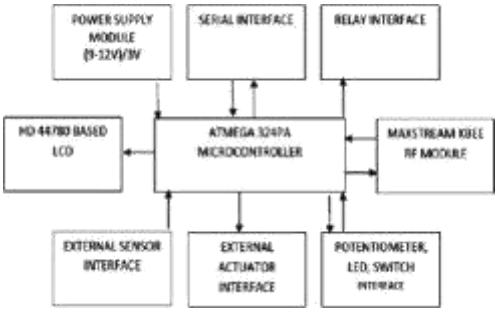

Fig. 5. Block Diagram of Sensor Node

ZigBee devices are particularly suitable for fast prototyping for wireless sensor network applications. It is possible to build complex mesh network using these devices. We have to develop application both at base station and sensor nodes to use some advanced features of ZigBee. We can connect number of sensors to the sensor node. The XBee module S2 is connected to sensor node board as shown in figure. The XBee module encapsulates 802.15.4 RF transceivers and ZigBee protocol stacks, and it can be easilyintegrated into any microcontroller or microprocessor systems such as Raspberry Pi through UART serial communication interface. The connection between controller of sensor node and XBee is shown in figure 6. The XBee module is configured as a router on the sensor nodes. Router can relay messages in a tree or mesh network and Coordinator has the capability to control the entire network. The XBee module can be configured into three types of devices: coordinator, router, and end device. Coordinator has the capability to control and initiates the entire network. Router can relay messages in a tree or mesh network topologies. End device can only communicate with the coordinator or the router. There can be only one coordinator in a network; the number of router or end device is not limited.

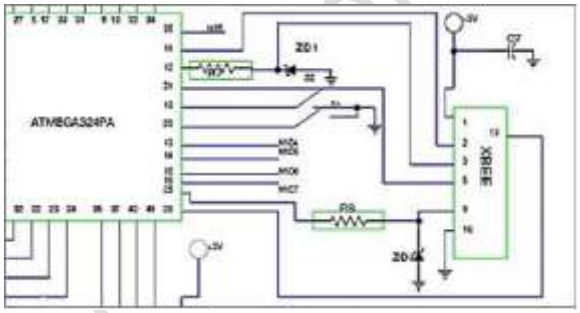

Fig. 6. Connection between Controller of Sensor Node and XBee

V. Experimental Setup and Results

In WSN, there are three types of devices: coordinator, router and end tags. There is only one coordinator in the network, which actually communicates with the base station shown in figure 7 and there can be more than one router and end devices. So, here one Xbee is configured as a coordinator, which is connected with the raspberry pi using UART protocol. For simple experimental purpose, just two sensor nodes are configured as R1 and R2. One sensor node is configured as an end tag E52 in which light sensor is connected (can be connected any sensor) shown in figure 9 which will send its real time data to the nearest router. The router has the capability of routing means router sends its data to its nearest router. So, raspberry pi received the sensors data from its nearest router and also coordinator sensor node will show that from which end device the data comes. The data comes in the base station is stored into the table created in database of raspberry pi. This table shown can be fetched from web browser/PhpMyAdmin by clients by using raspberry pi ip address. This table can be also seen in mysql terminal of raspberry pi. The program flowchart of end tag, router and coordinator is as shown in figure 12.

Fig. 7. The Base Station

Fig. 8. End Tag Device

Fig. 9. Router R1 Received Data Send by End Tag E52

Fig. 10. End Tag E52 Sending Nearest Router

Fig. 11. Router R1 Received Data Send by End Tag E52

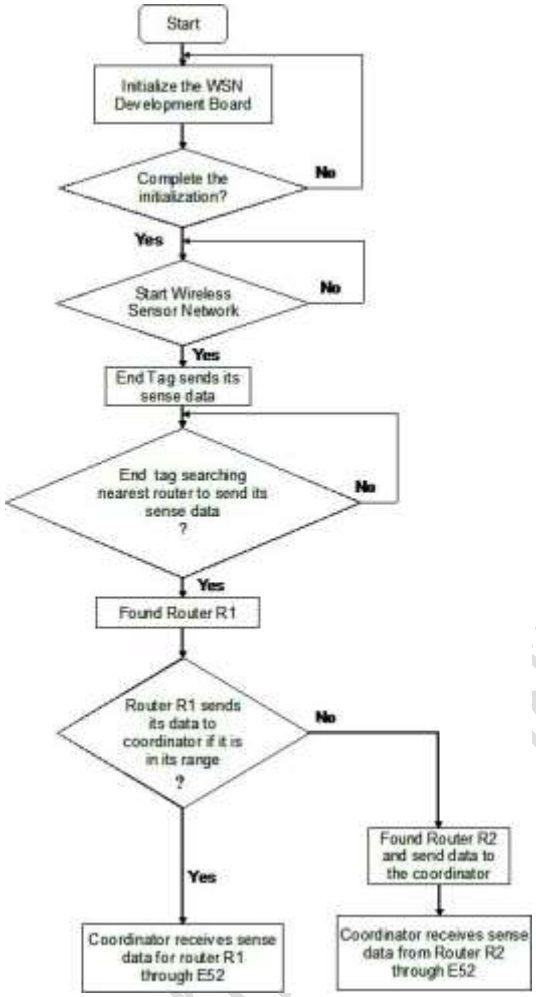

Fig. 12. Program Flowchart of End Tag, Router and Coordinator

VI. Conclusions

This paper designs a wireless sensor network system using sensor node, Raspberry Pi as a base station, XBee as a networking protocol, and a number of open-source software packages. Comparing with collection and forwarding information or data of traditional base station (gateway), this system has low-cost, low power consumption, compact, scalable, easy to deploy, and easy to maintain. One major advantage of the system lies in the integration of the gateway node of wireless sensor network, database server, and web server into one single compact, low-power, credit-card-sized computer Raspberry Pi, which can be easily configured to run without monitor, keyboard, and mouse. In addition, this system allows us to use it with implemented sensor networks using different hardware platforms. Such a system is very useful in many environmental monitoring and data collection.

References

[1] F. Akyildiz, W. Su, Y. Sankarasubramaniam, and E. Cayirci, "A survey on sensor networks," IEEE Communications Magazine, vol. 40,no.8,pp.102-114,August2002 (http://en.wikipedia.org/wiki/ Wireless_sensor_network)

[2] J. Yang, C. Zhang, X. Li, Y. Huang, S. Fu, M.F. Acevedo. "Integration of wireless sensor networks in environmental monitoring cyber infrastructure", *Wireless Networks, Springer/ACM*, Volume 16, Issue 4, pp. 1091-1108, May 2010

[3] G.Werner-Allen, P. Swieskowski, and M.Welsh. "MoteLab: A wireless sensor network testbed",*Fourth International Symposium on Information Processing in Sensor Netoworks*, pp. 483-488, Boise, ID, USA, April 2005

[4] Powers, Shawn. "The open-source classroom: your first bite of raspberry pi." *Linux Journal* 2012.224 (2012):7.http://www.raspberrypi.org

[5] RaspberryPi,webpage:http://en.wikipedia.org/ wiki/Raspberry_Pi [April20, 2014]

[6] IEEE 802.15 WPAN Task Group 4 (TG4), available at http://www.ieee802.org/15/pub/TG4.html

[7] J. S. Lee, "Performance evaluation of IEEE 802.15.4 for low-rate wireless personal area networks," *IEEE Trans. Consumer Electron.*, vol. 52, no. 3, pp. 742-749, Aug. 2006

[8] ZigBee Specification.ZigBee Alliance 2006.http:// www.zigbee.org/.

[9] DigiInternational Inc., available at http://www.digi.com

[10] Sheikh Ferdoush, Xinrong Li "Wireless Sensor Network System Design using Raspberry Pi and Arduino for Environmental Monitoring Applications", *Elsevier The 9th International Conference on Future Networks and Communications (FNC-2014)*

[11] X. Wei, J. Liu, G. Zhang. "Applications of web technology in wireless sensor network",*The 3rd IEEE InternationalConference on Computer Science and Information Technology (ICCSIT)*, pp. 227-230, 2010

[12] Vujovic, V.; Maksimovic, M., "Raspberry Pi as a Wireless Sensor node: Performances and constraints," *Information and Communication Technology,*

Electronics and Microelectronics (MIPRO), 2014 37th International Convention on, vol., no., pp.1013,1018, 26-30 May 2014

[13] Kochlan, M.; Hodon, M.; Cechovic, L.; Kapitulik, J.; Jurecka, M., "WSN for traffic monitoring using Raspberry Pi board," *Computer Science and Information Systems (FedCSIS), 2014 Federated Conference on*, vol., no., pp.1023,1026, 7-10 Sept. 2014

[14] Jin-Shyan Lee, Yu-Wei Su, and Chung-Chou Shen "A Comparative Study of Wireless Protocols: Bluetooth, UWB, ZigBee, and Wi-Fi" *The 33rd Annual Conference of the IEEE Industrial Electronics Society (IECON*) Nov. 5-8, 2007, Taipei, Taiwan

[15] Xiaohui Cheng; Fanfan Shen, "Design of the wireless sensor network communication terminal based on embedded Linux," *Software Engineering and Service Science (ICSESS), 2011 IEEE 2nd International Conference on*, vol., no., pp.598, 601, 15-17 July 2011.

[16] Research on ZigBee Wireless Sensors Network Based on ModBus Protocol, SciRes,Wireless Sensor Network, 2009, 1, 1-60

[17] Bin Bahrudin, M.S.; Abu Kassim, R.; Buniyamin, N., "Development of Fire alarm system using Raspberry Pi and Arduino Uno," *Electrical, Electronics and System Engineering (ICEESE), 2013 International Conference on*, vol., no., pp.43,48, 4-5 Dec. 2013

[18] Singh, R.; Mishra, S., "Temperature monitoring in wireless sensor network using Zigbee transceiver module," Power, Control and Embedded Systems (ICPCES), *2010 International Conference on*, vol., no., pp.1, 4, Nov. 29 2010-Dec. 1 2010

[19] Zhang Ruihua, Yuan Dongfeng "Embedded wireless sensor network node design, "*Computer Engineering, 2007*.3, 283-285

[20] Nikhade, Sudhir G.; Agashe, A.A., "Wireless sensor network communication terminal based on embedded Linux and Xbee," *Circuit,Power and Computing Technologies (ICCPCT), 2014 International Conference on,vol.,no.*,pp.1468,1473, 20-21 March 2014