Journal of Engineering Sciences
Vol11,Issue2,FEB/2020
ISSN NO:0377-9254

IMPLEMENTING A SYSTEM TO DETECT OVERSPEEDING AND NUMBER PLATE DETECTION & INFORM AUTHORITIES

[1]R.SAI SARANYA, [2]Sri G.S.SURENDRA BABU M.Tech.,(Ph.D.)
[1]Pg Scholar,[2]Associate Professor & H.O.D.
Department of Electronics and Communication Engineering
BHEEMA INSTITUTE OF TECHNOLOGY AND SCIENCE Alur Road, ADONI, A.P

ABSTRACT

This project aims to monitor vehicles speed to prevent crashes occurrence and reduce the impact when they occur. The project proposes a modern and an efficient methodology for detecting and reporting illegal speeds.

The System mainly consists of an IR module for speed measurement and Raspberry PI as the processing and controlling unit and if the speed exceeded then Camera will take picture. That picture converts into number format by using image processing technique.

A GSM module for sending vehicle number to authorities mobiles. The system alerts the driver if he exceeded the allowed speed limit by a Buzzer. An infraction is reported against him if he didn't slow down within a predefined amount of time. The infractions are sent to a central database and are displayed in mobile phone. The system was implemented in a local network, so an Ethernet cable sufficed for the communication purpose. In this work added fire sensor for when fire occurs in vehicles. That information passes through GSM to the Selected USER .

I. INTRODUCTION

Objective:

We all know that speeding or rather over speeding is one of the major causes for accidents. In this busy life scenario, people don't prefer to drive at normal speed rather than departing early from their respective places to reach on time. Thus, there is a need to understand the importance of a technology which would function as a speed limit enforcement system. A system which would help to keep vehicles at normal speed and the owner of the over speeding vehicle would be punished under law, as law is one of the best ways for making people to create a habit of driving at normal designated speeds. In some places, traffic policemen are present to monitor the normal functioning of traffic on roads and at other places radar system is implemented which is a technology based on the Doppler Effect and determines the speed of the moving object with just one trigger. The whole system whether it's radar or any other is manual and requires a man to take charge of watching the vehicles passing by and to report if any vehicle over speeds or breaks the law. In any system, the advancements in technology used prioritize the automation over manhandled machines. So, the traffic monitoring system should also be automatic which is possible in many ways. An idea of one of such system is presented by this paper. The project so developed keeping in view all the things mentioned above is named as Speed Check and over speed Detector. This is a prototype of a system which uses a technology that focuses on calculating the speed of approaching vehicle and also captures the image of the vehicle that over speeds.

Motivation:

Proposed system is that it will detect the speed of the car and if it is above the defined speed limit of the road, it will click a snap of the license plate number of the car. Not only that, it will also read the license plate number, extract the number and send it to the nearest concerned traffic authorities.

Documentation outline:

This project documentation includes with ten chapters. First chapter describes the introduction to the project i.e. objective, motivation, existing system, proposed system. Second chapter provides literature review of the project. Third chapter emphasizes regarding the embedded system. Fourth chapter explains regarding the project description. Fifth chapter explains regarding Hardware elements utilized in the project. Sixth chapter offers the code elements utilized in the project. Seventh chapter

deals with Results obtained. Eighth chapter explains blessings of the project. Ninth chapter offers Future Scope. Tenth chapter describes Conclusion.

Existing Method:

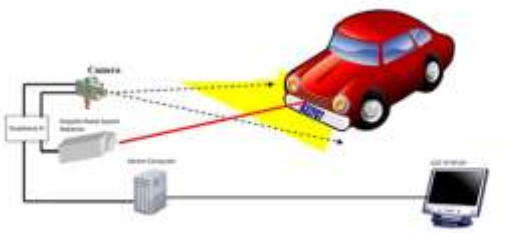

Fig 1.: Overview of the existing system

In the existing method there is a radar gun which works on the principle of Doppler effect. By calculating the speed and if the speed exceeds the limit then camera will be ON and takes the picture of vehicle and sends the image to the server computer.

Proposed Method:

Thus the study of different papers have helped us to propose a system which will be independent of light or weather conditions and uses simple but efficient image processing techniques to extract the required number plate. In the place of radar speed detector here IR sensors are used to detect the over speed and an LCD display along with server computer to display the required number plate of a vehicle.

II. LITERATURE REVIEW

1) "Detection of Over speeding Vehicles on Highways" by Monika Jain, Praveen Kumar, Priya Singh, Chhavi Narayan Arora, Ankita Sharma. As VANET and image processing being the core disciples of the technology field, there are multiple numbers of study resources and papers available from various publication journals. Based on definition of our problem statement, we have selected few papers as a base reference for the completion of our project. The following study represents a brief introduction of the papers we are using in our research project- This paper presents a device to detect rash driving on highways and to alert the traffic authorities in case of any violation. In past, lot of devices to detect rash driving on highways has been made. Most of the approaches require human concentration and involve a lot of effort, which is difficult to implement. In this paper it is intended to design a system aimed at early detection and alert of dangerous vehicle driving patterns related to rash driving.

2)"Advanced Vehicle Over Speed Detection and Billing System" by Vijin P.Suhail Basheer V. Shaab Mon PK, Sabin MK, Nikhil V. Advanced vehicle over speed detection and billing system will entail a speed sensing mechanism which automatically updates a database of traffic police with the details of an over speeding vehicle using the GSM/GPRS system. Once the details are updated, the driver is charged for over speeding. . This method is an advanced version of speed detection and billing system and it is placed in vehicles. It makes use of the following units Arduino MEGA, Speed sensors, GSM/GPRS unit, and LCD display unit.

III. PROJECT DESCRIPTION

This chapter deals with working of "Implementing a system to detect over speeding & number plate detection & inform authorities". It can be simply understood by its block diagram.

Block Diagram:

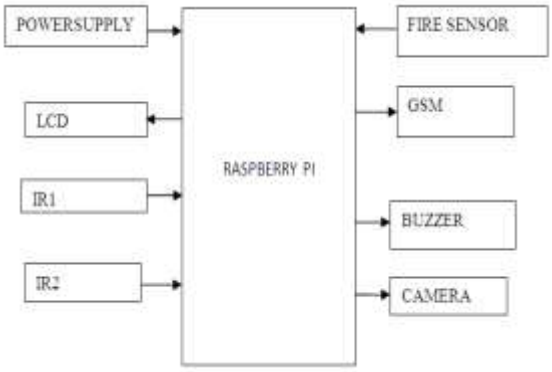

Fig :2. Block diagram

Description:

- First initialize the raspberry pi and LCD by connecting adapters.
- Connect the camera module, keyboard, mouse to the raspberry pi.
- Connect the raspberry pi to the computer using HDMI cable.
- After connecting the raspberry pi to the computer the whole software loads and on the desktop click the icon named project.
- In the project there is a file called project.py where the code for implementing the required embedded system i.e. over speed and number plate detection and inform authorities is saved in python language.
- Click on project.py then code displays on notepad then click on F5 to run the program.

- If the vehicle crosses the IR sensors with over speed then camera and buzzer gets ON and another window displays to capture the vehicle number plate.
- The number plate gets detected by image processing and it is displayed on LCD and message of over speed is sent to the required authorities using GSM.

Software Requirements:

- Python

Hardware Requirements:

- Power supply
- Raspberry Pi 3
- Fire sensor
- IR sensor
- LCD
- GSM

HARDWARE DESCRIPTION

This chapter briefly explains about the hardware implementation. It discusses the circuit diagram of each module in detail.

Raspberry Pi:

It is a powerful, low cost, and a small card sized device which is a perfect platform for interfacing with many devices. The board contains a processor, graphics chip, RAM memory, interfaces to other devices and connectors for external devices, of which some are necessary and some are optional. There are much versions of Raspberry Pi but the CPU (BCM2835) of all the models of Raspberry Pi remains same. The CPU is somewhat cheap, powerful and efficient and it does not consume a lot of power. It works in the same way as a standard PC requiring a keyboard for giving commands, a display unit and power supply.

Here, in Raspberry Pi, SD cards used in the same way as the hard disc in the computer. The connectivity of raspberry pi to the internet may be via a LAN (Local Area Network) cable / Ethernet or via a USB modem. The main advantage of Raspberry Pi is that it has a large number of applications. It also has 4 pole stereo output and composite video port. Video processing applications are also possible using raspberry pi like video compression.

The Raspberry-Pi runson Linux based OS, an open source operating system. In this system we used Raspbian OS which is Linux based OS. The programming language for the Raspberry-Pi for the system implementation is Python.

Hardware:

The Raspberry Pi hardware has evolved through several versions that feature variations in memory capacity and peripheral-device support.

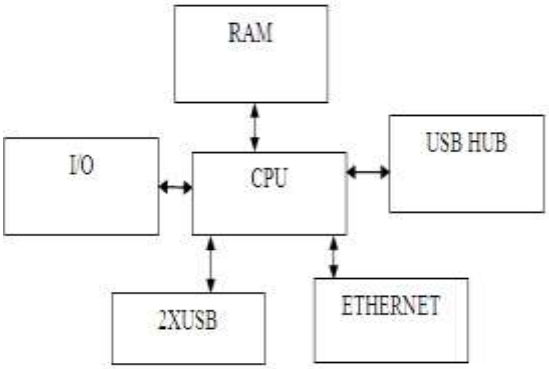

Fig.3. Block diagram of raspberry pi

This block diagram depicts Models A, B, A+, and B+. Model A, A+ and the Pi Zero lacks the Ethernet and USB hub components. The Ethernet adapter is internally connected to an additional USB port. In Model A, A+, and the Pi Zero, the USB port is connected directly to the system on a chip (SoC). On the Pi 1 Model B+ and later models the USB/Ethernet chip contains a five-point USB hub, of which four ports are available, while the Pi 1 Model B only provides two. On the Pi Zero, the USB port is also connected directly to the SoC, but it uses a micro USB (OTG) port.

Processor:

The Raspberry Pi 2 uses a 32-bit 900 MHz quad-core ARM Cortex-A7 processor. The Broadcom BCM2835 SoC used in the first generation Raspberry Pi is somewhat equivalent to the chip used in first modern generation smartphones(its CPU is an older ARMv6 architecture),which includes a 700 MHz ARM1176JZF-S processor, VideoCore IV graphics processing unit (GPU),and RAM. It has a level 1 (L1) cache of 16 KB and a level 2 (L2) cache of 128 KB. The level 2 cache is used primarily by the GPU. The SoC is stacked underneath the RAM chip, so only its edge is visible.

The earlier models of Raspberry Pi 2 use a Broadcom BCM2836 SoC with a 900 MHz 32-bit quad-core ARM Cortex-A7 processor, with 256 KB shared L2 cache. The Raspberry Pi 2 V1.2 was upgraded to a Broadcom BCM2837 SoC with a 1.2 GHz 64-bit quad-core ARM Cortex-A53 processor, the same SoC which is used on the Raspberry Pi 3.The Raspberry Pi 3 uses a Broadcom BCM2837 SoC with a 1.2 GHz 64-bit quad-core ARM Cortex-A53 processor, with 512 KB shared L2 cache.

Performance:

The Raspberry Pi 3, with a quad-core Cortex-A53 processor, is described as 10 times the performance of a Raspberry Pi 1.This was suggested to be highly dependent upon task threading and instruction set use. Benchmarks showed the Raspberry Pi 3 to be approximately 80% faster than the Raspberry Pi 2 in parallelized tasks.

Raspberry Pi 2 includes a quad-core Cortex-A7 CPU running at 900 MHz and 1 GB RAM. It is described as 4–6 times more powerful than its predecessor. The GPU is identical to the original. In parallelized benchmarks, the Raspberry Pi 2 could be up to 14 times faster than a Raspberry Pi 1 Model B+.

Fig . 4.The Model B board

GSM:

The Global System for Mobile Communications (GSM) is a standard developed by the European Telecommunications Standards Institute(ETSI) to describe the protocols for second-generation (2G) digital cellular networks used by mobile devices such as mobile phones and tablets. It was first deployed in Finland in December 1991.By the mid-2010s, it became a global standard for mobile communications achieving over 90% market share, and operating in over 193 countries and territories.

2G networks developed as a replacement for first generation (1G) analog cellular networks. The GSM standard originally described a digital, circuit-switched network optimized for full duplex voice telephony. This expanded over time to include data communications, first by circuit-switched transport, then by packet data transport via General Packet Radio Service (GPRS), and Enhanced Data Rates for GSM Evolution(EDGE).

"GSM" is a trade mark owned by the GSM Association. It may also refer to the (initially) most common voice codec used, Full Rate.

Fig. 5.SIM800L Module

IR SENSOR:

Infrared is a energy radiation with a frequency below our eyes sensitivity. When you approach your hand to fire or warm element, you will "feel" the heat, but you can't see it. You can see the fire because it emits other types of radiation, visible to your eyes, but it also emits lots of infrared that you can only feel in your skin.

Fig: 6.IR Spectrum

There are two IR sensors in this project.IR Sensor module has great adaptive capability of the ambient light, having a pair of infrared transmitter and the receiver tube, the infrared emitting tube to emit a certain frequency, encounters an obstacle detection direction (reflecting surface), infrared reflected back to the receiver tube receiving, after a comparator circuit processing, the green LED lights up, while the signal output will output digital signal (a low-level signal), through the potentiometer knob to adjust the detection distance, the effective distance range 2 ~ 10cm working voltage of 3.3V-5V. The detection range of the sensor can be adjusted by the potentiometer, with little interference, easy to assemble, easy to use features, can be widely used robot obstacle avoidance, obstacle avoidance car assembly line count and black-and-white line tracking and many other occasions.

Fig.7.IR Sensor

Power Supply:

The power supplies are designed to convert high voltage AC mains electricity to a suitable low voltage supply for electronic circuits and other devices. A power supply can by broken down into a series of blocks, each of which performs a particular function. A d.c power supply which maintains the output voltage constant irrespective of a.c mains fluctuations or load variations is known as "Regulated D.C Power Supply".

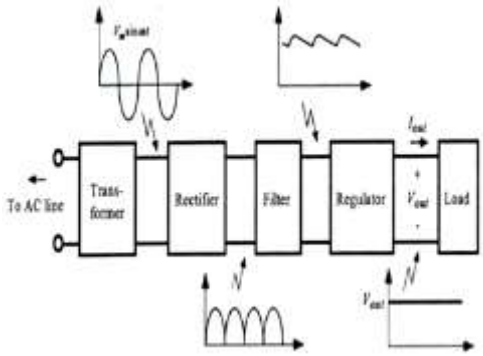

Fig:8 . Block Diagram of Power Supply

Fire Sensor:

A flame detector is a sensor designed to detect and respond to the presence of a flame or fire, allowing flame detection. Responses to a detected flame depend on the installation, but can include sounding an alarm, deactivating a fuel line (such as a propane or a natural gas line), and activating a fire suppression system. When used in applications such as industrial furnaces, their role is to provide confirmation that the furnace is working properly; in these cases they take no direct action beyond notifying the operator or control system. A flame detector can often respond faster and more accurately than a smoke or heat detector due to the mechanisms it uses to detect the flame. Fire Detection Sensor Module is sensitive to the flame, but also can detect ordinary light. Usually used as a flame alarm. Sensor detects the fire or a light source of a wavelength in the range of 760nm to 1100nm. Detection point of about 60 degrees, particularly sensitive to the flame spectrum. Sensitivity is adjustable, stable performance.

Fig .8. Fire sensor

CAMERA:

Raspberry pi Camera Board plugs directly into the CSI connector on the Raspberry Pi connector on the Raspberry Pi. It's able to deliver a crystal clear 5MP resolution image or 1080p HD video recording at 30fps with latest v1.3. Board features a 5MP (2592 × 1944 pixels) Omni vision 5647 sensor in a fixed focus module. The module attaches to Raspberry Pi, by way of a 15 pin Ribbon Cable, to the dedicated 15 pin MIPI Camera Serial Interface (CSI), which was designed especially for interfacing to cameras. The CSI bus is capable of extremely high data rates, and it exclusively carries pixel data to the BCM2835 processor. Another way of connecting a camera module is through usb hub. In this project usb camera module is used. It is used to capture the image of a vehicle which crosses the speed limit and sends to the pi for further image processing to extract the vehicle number plate.

Figure : 9. Camera module

LCD:

Alphanumeric LCD:

Liquid Crystal Display also called as LCD is very helpful in providing user interface as well as for debugging purpose. The most commonly used Character based LCDs are based on Hitachi's HD44780 controller or other which are compatible with HD44580. The most commonly used LCDs found in the market today are 1 Line, 2 Line or 4 Line LCDs which have only 1 controller and support at most of 80 characters, whereas LCDs supporting more than 80 characters make use of 2 HD44780 controllers.

Pin Description:

Fig: 10.Pin diagram of LCD

IV. EXPERIMENTAL RESULT

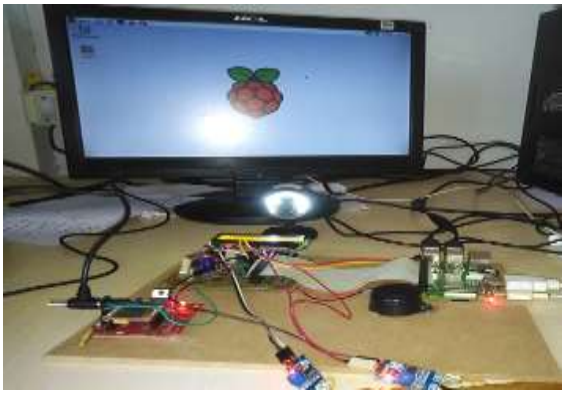

Fig :11. Overview of the project

The overview of project displays a raspberry pi, IR sensors, fire sensor, buzzer, GSM module, camera and all these are interfaced to computer which acts as server.

Fig . 12. Over speed display on LCD

When a vehicle over speeds which is detected by the sensors then over speed is displayed on LCD along with buzzer sound.

Fig.: 13. Capturing the vehicle number

Along with displaying on LCD after detection of overspeed then camera gets ON to capture the image of Vehicle Number for further processing.

Fig. 14.SMS of vehicle number detected

After capturing the image the detected vehicle number will be sent to the concerned authority mobile numbers through SMS by GSM module.

Fig .15. Fire detected display on LCD

If fire gets detected by fire sensor then it will be displayed on LCD along with Buzzer sound to alarm the authorities in case of accidents by displaying on server and sends the message through SMS to required authorities.

ADVANTAGES

- Vehicle speed is simply monitored through text message.
- Data is uploaded to each the server and GSM once sure intervals.
- All the knowledge is fed into one server.
- The camera which is used to capture the images can be changed based on our requirement to improve quality of the images.
- Since we are using raspberry pi and other sensors so the cost associated with implementation and installation is low so it will be user friendly.
- Automatic number plate recognition cameras are used for Traffic management system. It is used to

analysis the behavior of a motorist for transport planning purposes.

- The solutions are mainly used to recognize the guest vehicles in order to assist visitor management systems.
- This system is economical with low power consumption capability, easy setup, high performance and time to time response.

FUTURE SCOPE

There is always chance to improve any system as research & development is an endless process.

This system is no exception to this phenomenon. The system can be modified as:

- Accuracy can be increased using Neural Networks. Advanced image processing algorithms and libraries could be used so that the system can be used efficiently even during unfavorable lighting conditions and during the night time as well.
- Security of data during communication can be another important work for the future development of this project.
- Can be used as traffic counters to count the number of vehicles plying on a highway.
- The stolen vehicle can be detected by comparing with the registered entry of stolen vehicles.

V. CONCLUSION

The motive of this paper is to contribute to the advancement in the present traffic monitoring system; a technology that would work as a speed limit enforcement system or simply, a Speed Trap. The system monitors the maintenance of normal speed by the vehicles and does not require being man handled as in radar gun speed monitoring system. Thus, it helps in reducing frequently occurring accidents.

REFERENCES:

[1]. "Automation controller taps Raspberry Pi Compute Module". LinuxGizmos.com. 25 June 2014, Retrieved 10 March 2017.

[2]. Vehicle and Transport Management Act of Nepal 2003.

[3]. Vehicle License Plate Recognition (Shrestha L., Mishra P. Bhagat R. and Pun T).

[4]. “A License Plate Recognition and Speed Detection System” (C. Leo, D. David, 2008).

[5]. Nurhadiyatna A.Hardjono B “Vehicle speed measurement using camera as sensor”, IEEE, Dec. 2012.

[6].AmmarAwniAbbass University of Baghdad "Estimating vehicle speed using image processing", AL-Mansour Journal / No.14/ Special Issue / (Part Two) 2010.

[7].Osma Ibrahim, Hazem ElGendy, "Speed detection camera using image processing techniques on video streams", IJCEE, December 2011.

[8]. Traffic Signal Control System Using Camera Sensor and Embedded System, TENCON 2011-2011,IEEE Region 10 Conference, pp. 1261-1265, 2011.

[9]. Mukesh Kumar, “A Real-Time Vehicle License Plate Recognition (LPR) System”, A thesis report submitted for the completion of Master degree in Electronics Instrumentation and control engineering, July 2009.

[10]. H. Asha, R.Uday Shankar, Rashmin “Radar Based Cost Effective Vehicle Speed Detection Using Zero Cross Detection”.