Journal of Engineering Sciences
Vol 11, Issue 5,May/2020
ISSN NO:0377-9254

FABRICATION OF CELLPHONE CONTROLLED ANTI THEFT WHEEL LOCKING SYSTEM

V.Sugandhi[1], S.Jeyabharathi[2] and P.Balashanmugam[3]

[1]*Associate Professor, Manufacturing Engineering, Annamalai University, India.*

[2]*Lecturer ,Mechanical Engineering, Central Polytechnic College, Chennai.*

[3]*Associate Professor, Mechanical Engineering, Annamalai University, India.*

[1&3]*Deputed to Central Polytechnic College, Chennai.*

Email:pbsapme1980@gmail.com

***Abstract*— The purpose of this anti-theft wheel locking system project is to hinder the theft of bikes with the help of the wheel locking system. To lock the front wheel of the bike DC geared motor is used as the main tool. The to and fro motion are controlled by a plunger which is connected with a battery power supply device. The drum brake system function enables with the brake lever. When the ignition key is kept in off stage the drum brake activates function. An embedded approach is also introduced into the system. The ATmega32A microcontroller is used to control the system. We use a DC geared motor to lock and unlock the bike wheel. If the mobile is theft from the unknown person then the micro controller should perform an action by analyzing front wheel motion gets activated the motor. To lock the wheel a password is sent as an SMS to the GSM module. To unlock the wheel another password is used to send to GSM module.**

***Keywords*—Electric brake,Microcontroller,Four bar mechanism,PWM channel and Gear box.**

1. INTRODUCTION

A car has three braking systems – the accelerator, the gears and the brakes themselves. A controlled, well anticipated and unhurried act of slowing down or stopping will involve the use of all the three. With proper observation of the road and traffic ahead, a driver can see the need for a reduction in speed long before he has to apply the brakes. The accelerator becomes a brake as soon as the foot is lifted from it. A Period of deceleration should, ideally, always precede the use of the foot brake. The gear becomes a braking system when the vehicle is shifted to a lower gear. When approaching a hazard the procedure to be followed is first to decelerate and then application of foot brakes and finally changing to a lower gear. The third part of the braking system consisting of the brakes themselves is the most important part and it is only with this part the vehicle can be brought to rest abruptly if needed. With the other two the accelerator and the gear the vehicle lose its momentum very slowly. Electric brakes a type of the braking system not very popular can be used commercially in passenger cars as they have several advantages. Electromagnetic brakes are used in other fields such as bottling plants. They are used for bringing the assembly to a quick stop each time for filling up the bottles. In this project we propose to deal with a new type of the electromagnetic brake using a solenoid switch.

2. DESCRIPTION OF MECHANICAL EQUIPMENT

2.1.L-ANGLE

Steel Angles are the most basic type of roll-formed steel. They are formed by bending a single angle in a piece of steel. Angle Steel is 'L' shaped; the most common type of Steel Angles is at a 90 degree angle is shown in Fig 1. The legs of the "L" can be equal or unequal in length. Steel angles are used for various purposes in a number of industries. Framing is one of the most common uses for steel angles, but steel angles are also used for brackets, trim, reinforcements, and many other uses. The larger the steel angle, the more weight and stress it can bear.

Fig.1 L-angle

2.2. GEARS

Gears are used in tons of mechanical devices as shown in Fig 2.They do several important jobs, but most important, they provide a gear reduction in motorized equipment. This is key because, often, a small motor spinning very fast can provide enough power for a device, but not enough torque. For instance, an electric screwdriver has a very large gear reduction because it needs lots of torque to turn screws, bu-t the motor only produces a small amount of torque at a high speed. With a gear reduction, the output speed can be reduced while the torque is increased.

Fig.2 Gears

2.2.1. TYPES

The gears are generally classified in to the following types as shown in Fig.3.

- Spur gears
- Helical gears
- Rack & pinion gears
- Bevel gears
- Miter gears
- Worm & worm gears
- Screw gears
- Internal gears

Fig. 3 Types of Gears

2.3. BRAKES

A brake is a mechanical device which inhibits motion. A common misconception about brakes is that brakes squeeze against a drum or disc, and the pressure of the squeezing action slows the vehicle down as shown in Fig.4.

Fig.4 Brakes

This is in fact a part of the reason for slowing down a vehicle. Actually brakes use friction of the brake shoes and drums to convert kinetic energy developed by the vehicle into heat energy. When we apply the brakes, the pads or shoes that press against the brake drums or rotor convert kinetic energy into thermal energy via friction. Thus brakes are essentially a mechanism to change energy types.

2.4. WELDING MACHINE

Welding is a fabrication or sculptural process that joins materials, usually metals or thermoplastics, by

using high heat to melt the parts together and allowing them to cool causing fusion. Welding is distinct from lower temperature metal-joining techniques such as brazing and soldering, which do not melt the base metal.

In addition to melting the base metal, a filler material is typically added to the joint to form a pool of molten material (the weld pool) that cools

to form a joint that, based on weld configuration (butt, full penetration, fillet, etc.), can be stronger than the base material (parent metal). Pressure may also be used in conjunction with heat, or by itself, to produce a weld. Welding also requires a form of shield to protect the filler metals or melted metals from being contaminated or oxidized.

Many different energy sources can be used for welding, including a gas flame (chemical), an electric arc (electrical), a laser, an electron beam, friction, and ultrasound. While often an industrial process, welding may be performed in many different environments, including in open air, under water, and in outer space. Welding is a hazardous undertaking and precautions are required to avoid burns, electric shock, vision damage, inhalation of poisonous gases and fumes, and exposure to intense ultraviolet radiation.

Some of the most common current welding methods are:

- Shielded metal arc welding
- Gas tungsten arc welding
- Gas metal arc welding, Etc.,

2.5. DC GEARED MOTOR

These motors are simple DC Motors featuring gears for the shaft for obtaining the optimal performance characteristics. They are known as Center Shaft DC Geared Motors because their shaft extends through the center of their gear box assembly.

These standard size DC Motors are very easy to use. Also, you don't have to spend a lot of money to control motors with an ARDUINO or compatible board. The L298N H-bridge module with onboard voltage regulator motor driver can be used with this motor that has a voltage of between 5 and 35V DC.

This DC Motor – 1000RPM – 12Volts can be used in all-terrain robots and a variety of robotic applications as shown in Fig.5. These motors have a 3 mm threaded drill hole in the middle of the shaft thus making it simple to connect it to the wheels or any other mechanical assembly.

Fig 5. DC geared motor

3. EMBEDDED HARDWARE DESCRIPTION MICROCONTROLLER

3.1.AVR ATMEGA32A

Fig. 6 ATmega32A microcontroller

The ATmega32A microcontroller is shown in Fig 6. ATmega32A has following features,

- High-performance, Low-power Atmel AVR 8-bit Microcontroller
- Advanced RISC Architecture

– 131 Powerful Instructions - Most Single-clock Cycle Execution.
– 32 × 8 General Purpose Working Registers.
– Fully Static Operation.
– Up to 16MIPS Throughput at 16MHz.
– On-chip 2-cycle Multiplier.

3.1.1. HIGH ENDURANCE NON-VOLATILE MEMORY SEGMENTS.

– 32Kbytes of In-System Self-programmable Flash program memory
– 1024Bytes EEPROM.
– 2Kbytes Internal SRAM.
– Write/Erase cycles: 10,000 Flash/100,000 EEPROM.
– Data retention: 20 years at 85°C/100 years at 25°C(1).
– Optional Boot Code Section with Independent Lock Bits.

3.1.2 IN-SYSTEM PROGRAMMING BY ON-CHIP BOOT PROGRAM.

3.1.3. TRUE READ-WHILE-WRITE OPERATION.

– Programming Lock for Software Security.

3.1.4.JTAG (IEEE STD. 1149.1 COMPLIANT) INTERFACE

– Boundary-scan Capabilities According to the JTAG Standard
– Extensive On-chip Debug Support
– Programming of Flash, EEPROM, Fuses and Lock Bits through the JTAG Interface

3.1.5. ATMEL QTOUCH LIBRARY SUPPORT

– Capacitive touch buttons, sliders and wheels
– Atmel QTouch and QMatrix acquisition
– Up to 64 sense channels

3.1.6. PERIPHERAL FEATURES

– Two 8-bit Timer/Counters with Separate Prescalers and Compare Modes
– One 16-bit Timer/Counter with Separate Prescaler, Compare Mode, and Capture Mode
– Real Time Counter with Separate Oscillator
– Four PWM Channels
– 8-channel, 10-bit ADC
  8 Single-ended Channels
  7 Differential Channels in TQFP Package Only
  2 Differential Channels with Programmable Gain at 1x, 10x, or 200x
– Byte-oriented Two-wire Serial Interface
– Programmable Serial USART
– Master/Slave SPI Serial Interface
– Programmable Watchdog Timer with On-chip Oscillator
– On-chip Analog Comparator

3.1.7.SPECIAL MICROCONTROLLER FEATURES

– Power-on Reset and Programmable Brown-out Detection
– Internal Calibrated RC Oscillator
– External and Internal Interrupt Sources
– Six Sleep Modes: Idle, ADC Noise Reduction, Power-save, Power-down, Standby, and Extended Standby

3.1.8.I/O AND PACKAGES

– 32 Programmable I/O Lines
– 40-pin PDIP, 44-lead TQFP, and 44-pad QFN/MLF

3.1.9. OPERATING VOLTAGES

– 2.7 - 5.5V

3.1.10. SPEED GRADES

– 0 - 16MHz

3.1.11. POWER CONSUMPTION AT 1MHZ, 3V, 25°C

– Active: 0.6mA
– Idle Mode: 0.2mA
– Power-down Mode: < 1µA

I/O Pin connections of ATmega32A Microcontroller in this project is given below,

- PA0 - LCD register select (RS) pin (0 to select LCD data register, 1 to select LCD command register).
- PA1 – LCD read / write select (R/W) pin (0 to write to LCD, 1 to read from LCD)
- PA2 – Enable pin (making high to low pulse will make the LCD to read the data in the LCD data port).
- PA3 to PA7 – output pins for interlocking relays for circuit breaker 1 to 5.
- PORT B (PB0 to PB7) – LCD data port.
- PORT C (PC0 to PC7) – 4x4 Matrix Keypad port.
- PD0 & PD1 – RXD & TXD (serial port to communicate with GSM module).
- PD2 to PD6 – input pins for interlocking relay status read.

3.2. PIN CONFIGURATION

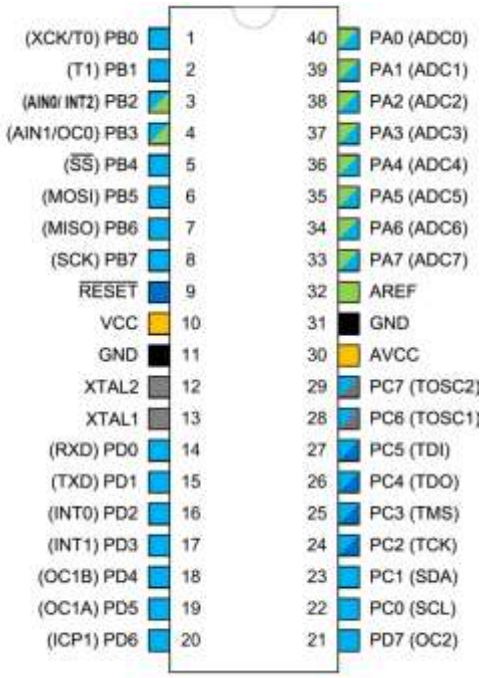

Fig. 7 Pin diagram of ATmega32A

The pin diagram of ATmega32A microcontroller is shown in Fig .7.Each port pin

consists of three register bits: DDxn, PORTxn, and PINxn. The DDxn bits are accessed at the DDRx I/O address, the PORTxn bits of the PORTx I/O address, and the PINxn bits in the PINx I/O address.

The DDxn bit in the DDRx Register selects the direction of this pin. If DDxn is written logic one, Pxn is configured as an output pin. If DDxn is written logic zero, Pxn is configured as an input pin.

If PORTxn is written logic one when the pin is configured as an input pin, the pull-up resistor is activated. To switch the pull-up resistor off, PORTxn has to be written logic zero or the pin has to be configured as an output pin. The port pins are tri-stated when reset condition becomes active, even if no clocks are running.

If PORTxn is written logic one when the pin is configured as an output pin, the port pin is driven high (one). If PORTxn is written logic zero when the pin is configured as an output pin, the port pin is driven low (zero).

When switching between the tri-state ({DDxn, PORTxn} = 0b00) and output high ({DDxn, PORTxn} = 0b11), an intermediate state with either pull-up enabled ({DDxn, PORTxn} = 0b01) or output low ({DDxn, PORTxn} = 0b10) must occur. Normally, the pull-up enabled state is fully acceptable, as a high-impedant environment will not notice the difference between a strong high driver and a pull-up. If this is not the case, the PUD bit in the SFIOR Register can be set to disable all pull-ups in all ports.

Switching between input with pull-up and output low generates the same problem. Either the Tristate ({DDxn, PORTxn} = 0b00) or the output high state ({DDxn, PORTxn} = 0b11) can be used as an intermediate step.

The table below summarizes the control signals for the pin value.

4. EMBEDDED SOFTWARE DESCRIPTION MICROCONTROLLER SOFTWARE

4.1. ATMEL STUDIO

Studio 7 is the integrated development platform (IDP) for developing and debugging all AVR® and SAM microcontroller applications. The Atmel Studio 7 IDP gives you a seamless and easy-to-use environment to write, build and debug your applications written in C/C++ or assembly code. It also connects seamlessly to the debuggers, programmers and development kits that support AVR® and SAM devices. Additionally, Studio includes Atmel Gallery; an online app store that allows you to extend your development environment with plug-ins developed by Microchip as well as third-party tool and embedded software vendors. Studio 7 can also seamlessly import your ARDUINO sketches as C++ projects, providing a simple transition path from Maker space to the Marketplace.

4.2. KEY FEATURES

- Support for 500+ AVR and SAM devices
- Vast source code library, including drivers, communication stacks, 1,600+ project examples with source code, graphic services and touch functionality through Advanced Software Framework (ASF)
- IDE extensions through Atmel Gallery, the online apps store, for development tools and embedded software from Microchip and third parties
- Tune capacitive touch designs, validate system performance, monitor power consumption, and real-time data and trace graphing with Atmel Q Touch Composer
- Configure and test the performance of wireless designs with the Wireless Composer running on the target
- Write and debug C/C++ and assembly code with the integrated compiler
- Advanced debugging features include complex data breakpoints, nonintrusive trace support (SAM3 and SAM4 devices), statistical code profiling, interrupt trace/monitoring, polled data tracing (Cortex-M0+ devices), real-time variable tracking with optional time stamping.
- Integrated editor with visual assist
- Project wizards allowing projects created from scratch or from a large library of design examples
- In-system programming and debugging provides interfaces to all Atmel in-circuit programmers and debuggers
- Create transparent debug views into the CPU and peripherals for easy code development and debugging

- Full chip simulation for an accurate model of CPU, interrupts, peripherals, and external stimuli

4.3. PCB DESIGN SOFTWARE

4.3.1. EAGLE

- Autodesk EAGLE is an electronic design automation (EDA) software. Enabling printed circuit board (PCB) designers to seamlessly connect schematic diagrams, component placement, PCB routing, and comprehensive library content
- The EAGLE is a scriptable electronic design automation application with schematic capture, printed circuit board layout, auto-router and computer-aided manufacturing features. EAGLE stands for Easily Applicable Graphical Layout Editor and is developed by CadSoft Computer GmbH.
- EAGLE contains a schematic editor, for designing circuit diagrams. Schematics are stored in files with .SCH extension; parts are defined in device libraries with .LBR extension. Parts can be placed on many sheets and connected together through ports.
- The PCB layout editor stores board files with the extension .BRD. It allows back-annotation to the schematic and auto-routing to automatically connect traces based on the connections defined in the schematic.
- EAGLE saves Gerber and PostScript layout files as well as Excellent and Sieb& Meyer drill files. These are standard file formats accepted by PCB fabrication companies, but given EAGLE's typical user base of small design firms and hobbyists, many PCB fabricators and assembly shops also accept EAGLE board files (with extension .BRD) directly to export optimized production files and pick-and-place data themselves.
- EAGLE provides a multi-window graphical user interface and menu system for editing, project management and to customize the interface and design parameters. The system can be controlled via mouse, keyboard hotkeys or by entering specific commands at an embedded command line. Multiple repeating commands can be combined into script files (with file extension .SCR). It is also possible to explore design files utilizing an EAGLE-specific object-oriented programming language (with extension .ULP).The block diagram of proposed system is shown in Fig.8.The electrical/electronic circuit design is also shown in Fig. 9.

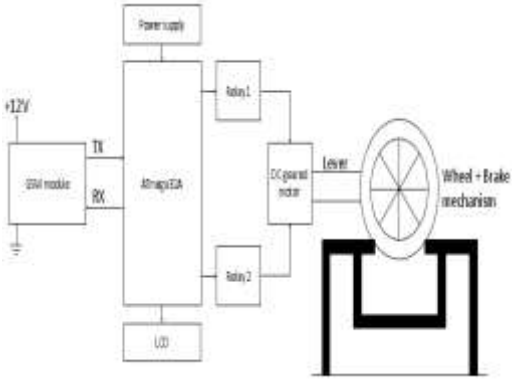

Fig.8 Block diagram of proposed system

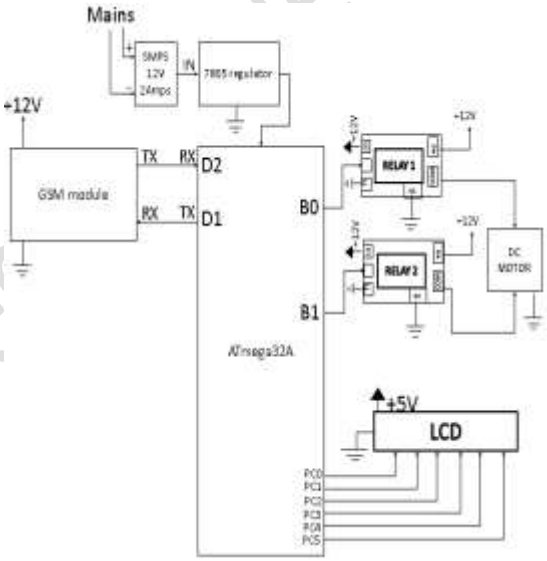

Fig.9 Electrical/electronic circuit design

5. WORKING PRINCIPLE

This system uses a four bar mechanism, that follows a coupler curve. It has a greater advantage than the existing system of transport of work pieces in a factory. The materials are transferred from one workstation to another at a specific time interval, which is based on the movement of the linkages. In a continuous assembly factory, there is a need to transfer materials or to process jobs from one working station to the other. In this process, the movement of job from one station to another is accomplished by a belt conveyor system. The system uses an electric drive which is continuous. So the operator does not get sufficient time to complete the operation. Thus the jobs are usually picked and placed onto the workstation and the job is processed. This is a tiring and a time consuming job. Also for heavy materials, a separate setup is

required for the pick and place operation. This project proposes the model of at the imbedding transport mechanism. This system uses kinematic linkages for timing the transportation. It uses a four bar mechanism, that follows a coupler curve. It has a greater advantage than the existing system of transport of work piece in a factory.

6. MERITS & APPLICATIONS

6.1. MERITS

- As we have an embedded part, we can control the system from anywhere via SMS.
- GSM plays a major role in the system.
- Theft of the vehicle can be avoided easily.

7. APPLICATIONS

- Job feeding systems.
- Continuous assembly plant.
- Packaging industries.
- Automobile industries.

CONCLUSION

This fabricated part uses the model of a timed transport mechanism. This system uses kinematic linkages for timing the transportation. Four bar mechanism that follows a coupler curve. It has a greater advantage than the existing system of transport of work pieces in a factory. Thus the project proposed a model where the materials are transported with a time delay. This provides a huge advantage over the existing systems.

REFERENCES

[1]. Arun Kumar N., Srinivasan V., Krishna Kumar P., Analysing the strength of unidirectional fibre orientations under transverse static load, International Journal of Applied Engineering Research, v-9, i-22, pp-7749-7754, 2014.

[2]. Srinivasan V., Analysis of static and dynamic load on hydrostatic bearing with variable viscosity and pressure, Indian Journal of Science and Technology, v-6, i-SUPPL.6, pp-4777-4782, 2013.

[3]. Srinivasan V., Optimizing air traffic conflict and congestion using genetic algorithm, Middle - East Journal of Scientific Research, v-20, i-4, pp-456-461, 2014.

[4]. Praveen R., Achudhan M., Optimization of jute composite as a noise retardant material, International Journal of Applied Engineering Research, v-9, i-22, pp7627-7632, 2014. International Journal of Pure and Applied Mathematics Special Issue 439.

[5]. Raja Kumar G., Achudhan M., Srinivasa Rao G., Studies on corrosion behaviour of borated stainless steel (304B) welds, International Journal of Applied Engineering Research, v-9, i-22, pp-7767-7772, 2014.

[6]. Ganeshram V., Achudhan M., Design and moldflow analysis of piston cooling nozzle in automobiles, Indian Journal of Science and Technology, v-6, i-SUPPL.6, pp4808-4813, 2013.

[7]. Ganeshram V., Achudhan M., Synthesis and characterization of phenol formaldehyde resin as a binder used for coated abrasives, Indian Journal of Science and Technology, v-6, i-SUPPL.6, pp-4814-4823, 2013.

[8]. Achudhan M., Prem Jayakumar M., Mathematical modeling and control of an electrically-heated catalyst, International Journal of Applied Engineering Research, v-9, i-23, pp-23013-, 2014.

[9]. Anbazhagan R., Satheesh B., Gopalakrishnan K., Mathematical modeling and simulation of modern cars in the role of stability analysis, Indian Journal of Science and Technology, v-6, i-SUPPL5, pp-4633-4641, 2013.

[10].Udayakumar R., Kaliyamurthie K.P., Khanaa, Thooyamani K.P., Data mining a boon: Predictive system for university topper women in academia, World Applied Sciences Journal, v-29, i-14, pp-86-90, 2014.

[11]. Kaliyamurthie K.P., Parameswari D., Udayakumar R., QOS aware privacy preserving location monitoring in wireless sensor network, Indian Journal of Science and Technology, v-6, i-SUPPL5, pp-4648-4652, 2013.

[12]. Kumar J., Sathish Kumar K., Dayakar P., Effect of microsilica on high strength concrete, International Journal of Applied Engineering Research, v-9, i-22, pp5427-5432, 2014.

[13]. Dayakar P., Vijay Ruthrapathi G., Prakesh J., Management of bio-medical waste, International Journal of Applied Engineering Research, v-9, i-22, pp-5518- 5526, 2014.

[14]. Iyappan L., Dayakar P., Identification of landslide prone zone for coonoortalukusingspatialtechnology, international

Journal of Applied Engineering Research, v-9, i-22, pp-5724-5732, 2014.

[15] L.Tatt Cheah and T. Asai, “Development of a control experiment for small movable object using PIC”, SICEIC ASE International Joint Conference, 2006.

[16] B.G.Nagraja, R.Rayappa, M Mahesh, M.Patil and T.C Manjunath, “Design and development of a GSM Based Vehicle Theft Control System”, Proceeding of IEEE on Advanced Computer Control, 2009.

[17] L.Wan and T.chen, “Automobile Anti-theft Sytem Design Based on GSM”, Proceeding of IEEE on Advanced Computer Control, 2009.

[18] Prawada P. Wankhede and Prof. S.O. Dahad, “Real Time Vehicle Locking and Tracking System using GSM and GPS technology”, Proceeding of International journal of Technology and Engineering System(IJTES), 2011.

[19] Muhammad Ali Mazidi, Janice Gillispie, Rolin McKinlay,The 8051 Microcontroller and Embedded systems, Pearson Publications, 2nd Edition, 2006.

[20] M.Abinaya and R. Uthira Devi (2014), “Intelligent Vehicle Control Using Wireless Embedded System in Transportation System Based On GSM and GPS Technology”, IJCSMC, Vol-3, Issue: 9, September-2014, Pg.244-258.

[21]Caroline, M.L., Vasudevan, S., "Growth and characterization of an organic nonlinear optical material: l-alanine alaninium nitrate", Materials Letters, ISSN : 0167-577X, 62(15) (2008) pp.2245-2248.

[22]Rishikesh H. Tike, Prof. Mukesh C. Chaudhari, "The Airbag System For 2-Wheeler Vehicle System", International Journal Of Research in Aeronautical and Mechanical Engineering (IJRAME) Vol.02, Issue-02, ISSN (Online): 2321-3051, Feb 2014, Pg.96-104.