Journal of Engineering Sciences
Vol 11, Issue 5,May/2020
ISSN NO:0377-9254

DIFFERENTIAL PROTECTION OF TRANSFORMER USING ARDUINO WITH GSM AND VOICE CIRCUIT

T.Pardha Saradhi, Ch. Bala Sai Vara Prasad, N.Raja, P.Nazeer, J. Sai Mounika, T.Bhagyasri.

*Dept. of Electrical And Electronics Engineering

Sree Vahini Institute of Science and Technology.

ABSTRACT

Transformers are the important equipment's in the power system. Therefore, the continuity of its operation is very necessary. So better protection scheme should develop for transformers. Differential protection technique can be employed to protect the Transformers. In this paper, we have used differential relay mechanism with GSM module and voice announcement circuit. The GSM and voice circuit is synchronized with Arduino microcontroller. Arduino Microcontroller is very high speed and cost effective device with fine accuracy. By programming in the Arduino the protection of transformers can be done. Programming is quite efficient and easy than 8051 microprocessor used in differential relay mechanism, so it is better to use Arduino place of 8051 microcontroller. The simulation results successfully justified this proposed system in proteus software also.

Keywords: Voice circuit, GSM Module, Current sensors, Relays, Transformers.

I INTRODUCTION

The transformer is one of the good number notable families in a nation system. And it is a static gadget which transforms electrical energy from one path to an added circuit. To shelter the transformer from atmospheric dust and dirt, it is absolutely enclosed and oil immersed. As transformer has no rotating part, the likelihood of a slip stirring in them is exceedingly rare. However, a pink drawback may be awfully treacherous except the transformer is cursorily disconnected from the system. This necessitates ample certain fortification for transformers against probable faults.

Lesser function transformers are provided with sequence fuses for defense against overloading and planet faults. No trail top is provided. I.e. no reflex shelter is given. However, the probability of faults on intensity transformers is extra and so habitual shelter is necessary.

A blunder which occurs beyond the safeguard zone of the transformer, but fed through the transformer is accepted as "Through faults". A detachment safeguard of transformer should not operate for through faults. The overload relaying may be provided to control with a time lag to make available back-up protection.

In-house faults are folks in the confined zone of the transformer. These faults bottle be between point to part and period to ground. Generally, they suggest itself awaited to a not a success of padding owed to fever rise. Initial faults are originally slight causing gradual damage. These faults extend into decided faults incipient faults include loose connection in conducting path, sparking, small arcing etc.

II TRANSFORMER PROTECTION

Over current protection: over current protection is used for the purpose of providing backup protection for large transformers. Two phase fault and one ground fault relay is sufficient to provide overcurrent protection to star delta transformer

Protection against over fluxing: The magnetic flux increases when the voltage increases. This results increased iron loss and magnetizing current which leads insulation damage. The expression for flux in a transformer is given by

$$\Phi = K\,E/f \qquad (1)$$

To control flux, the ratio E/f is controlled. When the ratio exceeds a threshold value, it has to be detected. Electronic circuits with suitable relays are available to measure this ratio. Over fluxing does not require high-speed tripping, but the transformer should

be isolated in one or two minutes at the most if over fluxing persists.

Over Voltage Protection: Lightning overvoltage surges originate from atmospheric discharges and they can reach their peak within a few microseconds and subsequently decay very rapidly. The surge overvoltage can reach up to 10 times the rated transformer voltage and they pose the greatest threat to the transformer on the distribution networks. Protection against surges can be achieved by using "Lightning Arresters". Percentage Differential Current Protection: This scheme is employed for the protection of transformers against internal short circuits and it provides the best overall protection for internal faults. The differential relay operates when there is a difference between incoming quantities and outgoing and if exceed some pre-set value. This difference carried out by using a set of current transformers as shown in the figure. The differential protection has serval drawbacks which are overcome by using percentage differential protection, the problems are listed below:-

Magnetizing inrush current

When the transformer is energized, there is no induced e.m.f, the resistance being low and a large inrush of magnetizing current produced. This inrush current is 6 to 8 times higher then peak rated current. But this is for very short duration, hence differential protection should not be operate for inrush current, so 0.2 seconds of time delay setting for this relay, while inrush current gets vanish completely.

CT's ratio

Alternator has same ratings of CT's but for transformer, both CT,s will have different ratting because of their input and output voltage is different, and this situation leads to run protection without any fault occur, that will solve by using restraining coil place midpoint of the pilot wire and operating coil will connect to middle of restraining coil as showing in figure. The current flowing through restraining coil can be taken as (I1+I2/2).With increasing in through current the restraining torque also increasing which will grater to the operating torque, hence operating torque is not sufficient to operate the relay.

Phase displacement

There is another problem is a phase displacement which is solving by providing below arrangement.

Connection Arrangement of Power Transformer and Current Transformer

Incipient Fault Protection:

Faults which are not serious at the beginning but which slowly develops into serious faults are knows as incipient faults i.e. tank oil temperature gradually increased which is taken care by "Buchholz Relay.

III RELAY

A relay is an electrically operated switch. These are remote control electrical switches that are controlled by another switch, such as a horn switch or a computer as in a power train control module, devices in industries, home based applications. Relays allow a small current pin, 4-pin, 5-pin, and 6-pin, single switch or dual switches. Relays are used throughout the automobile. Relays which come in assorted sizes, ratings, and applications, are used as remote control switches. A typical vehicle can have 20 relays or more.

Sr. No.	Power transformer connection		Current transformer connection	
	Primary	Secondary	Primary	Secondary
1.	STAR	DELTA	DELTA	STAR
2.	DELTA	STAR	STAR	DELTA
3.	STAR	STAR	DELTA	DELTA
4.	DELTA	DELTA	STAR	STAR

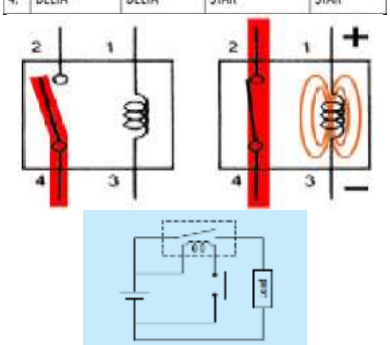

Basic Diagram Of Relay

IV CURRENT SENSORS

There are two primary types of current sensors, direct and indirect sensors. The direct sensor applies Ohms Law and Halls Effect. It has an integrated coil. By placing the coil around a current-carrying conductor, there in an induced voltage, which is proportional to the current in the system. By using various amplifiers such as shunt and operational amplifiers, as well as a user-friendly interface, it is then easy to detect and measure the current in the system. Do note that the shunt is designed to withstand short-circuit currents without any distortion to the resistance value. This allows an external, non-invasive way to measure the current. Direct sensors are used for low currents (<100A).

For higher currents (100-1000A), the indirect method is used. It works on Ampere's and Faraday's Laws by measuring the magnetic field that surrounds a current carrying conductor. Traditionally, current sensors were used for circuit protection and control. However, the values are presently used to monitor and enhance performance of different electronics and electrical equipment.

V GSM MODULE

Playback and record operations are managed by on-chip circuitry. These are several available messaging modes depending upon desired operation. These message modes determine message management style, message length, and external parts count. Therefore, the designer must select the appropriate operating mode before beginning the design. Operating modes do not affect voice quality for information on factors affecting quality refer to the sampling rate & voice quality section. The device supports five message management modes (defined by the MSEL1, MSEL2 and /M8_OPTION pins).Random access mode with 2, 4, or 8 fixed duration messages tape mode, with multiple variable duration messages, provides two options:

1. Auto rewind 2. Normal

Modes cannot be mixed. Switching of modes after the device has recorded an initial message is not recommended. If modes are switched after an initial recording has been made some unpredictable message fragments from the previous mode may remain present, and be audible on playback, in the new mode. These fragments will disappear after a record operation in the newly selected mode. Table1 defines the recording necessary to choose the desired mode. An important feature of the APR9600 message management capabilities is the ability prompts the user to change in the device's status through the use of "beeps" superimposed on the device's output. This feature is enabled by asserting a logic high level on the BE pin.

Mode	MSEL1	MSEL2	/M8_OPTION
Random access 2 fixed duration messages	0	1	Pull this pin to Vcc through 100k resistor
Random access 4 fixed duration messages	1	0	Pull this pin to Vcc through 100k resistor
Random access 8 fixed duration messages	1	1	The /M8 message trigger becomes input pin
Tape mode, Auto rewind operation	0	0	0
Tape mode, Normal operation	0	0	1

Table 1 Message Management General Description

VI VOICE CIRCUIT

The APR9600 device offers true single chip voice recording, nonvolatile storage, and playback capability for 40 to 60 seconds. The device supports both random and sequential access of multiple messages.

Sample rates are user selectable, allowing designers to customize their design for unique quality and storage time needs. Integrated output amplifier, microphone amplifier, and AGC circuits greatly simplify system design. The device is ideal for use in portable voice recorders, toys, and many other consumer and industrial applications.

APLUS integrated achieves these high levels of storage capability by using its proprietary analog/multilevel storage technology enables the

APR9600 device to reproduce voice signals in their natural form. It eliminates the need for encoding and compression, which often introduce distortion.

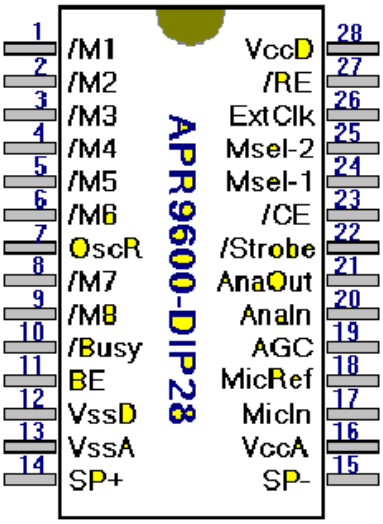

APR9600 DIP

VII ARDUINO

Arduino is a prototype platform (open-source) based on an easy-to-use hardware and software.

It consists of a circuit board, which can be programed (referred to as a microcontroller) and ready-made software called Arduino IDE (Integrated Development Environment), which is used to write and upload the computer code to the physical board.AVR is better than 8051 microcontrollers. AVR is an Atmel which is used in Arduino board. Arduino is open source hardware and has everything, no need for any external resistor or capacitor. It is cheaper and easy to use;

The programming is also very simple. Any system could develop easily with Arduino, and reach library file for designing purpose are easily available. Integrated development environment (IDE) is used for programming which is written in C or C++ language.

VIII DIFFERENTIAL PROTECTION OF TRANSFORMER BY USING ARDUINO WITH GSM AND VOICE CIRCUIT

Initially we give the supply to the power transformer .Here we used two current transformer which is used to measured current flowing in the power transformer both CT'S connected to the hall effect sensor both CT'S has same rating if any changes happen in between two CT'S hall effect sensor is activated it give the signal to the Arduino. Then Arduino will give commands to the relay.

Relay can then be triggered and the entire circuit turns off. When no adjustments are made in two CT 'S, the Hall Effect sensor does not activate the Arduino is in the place of rest.

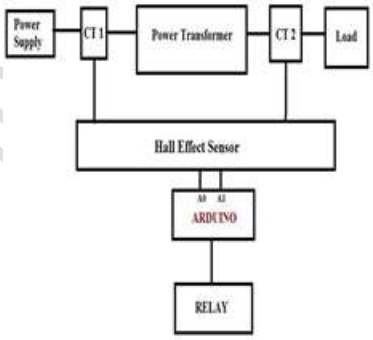

Block diagram

Working

Arduino is used as a brain. The circuit diagram as shown in below diagram. Here we used two current sensor ACS712 is which is connected to the Arduino through A0 and A1 pin. This relay is used to initiate the voice circuit which gives voice alert. Here we used 12v DC 1-phase relay which is connected to the 13 no pin of Arduino. As we can see GSM and voice circuit also integrated with Arduino. Under normal operating conditions currents on primary and secondary are same. So, the proportionate voltages generated by the current sensors on primary and secondary are same.

These two voltages will be applied to the Arduino.Under normal operating conditions these two voltages will be same in magnitude and difference is zero. So, the Arduino gives no signal to the relay. Whenever internal fault occurs in transformer the currents seen by the Current sensors on primary and secondary differs by some amount.

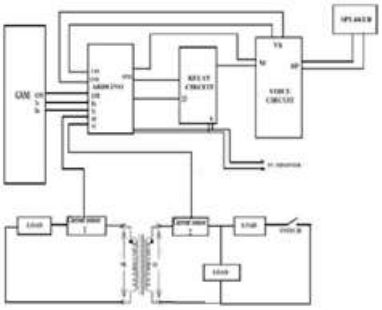

Connectional View of Proposed System

As a resulting voltage sensed by the Arduino from primary and secondary differs. As there is a difference in the voltage sensed by the Arduino. Arduino give a signal to the relay according to predefined program. And

when the relay is activated by the Arduino the relay will activate the voice announcement circuit. The voice circuit will give output predefined voice as alert to the operator. After three consecutive voice alerts Arduino will give a trip signal to the relay board and which is connected in series with the supply will open its contacts thus the supply to the hardware setup will be disconnected. And GSM will send a message showing a current different and place of which one transformer getting the fault to the operator. And also operator can perform the respective action for faulty transformer from anywhere through sending a message back to the GSM. Some faults happen to the transformer which is not a harmful for the system, so for that condition power transformer should not isolate from the power system, so here we designed system for such situation.

Circuit diagram of proposed system

Let we choose allowed current difference is 0.5 amp, so at that difference GSM send a message to the operator **OVERLOAD**.so when operator give call to GSM the system will automatically back to the operation.

IX CODING

```
#include <SoftwareSerial.h>
#include <LiquidCrystal.h>
LiquidCrystal lcd(13,12,11,10,9,8);
int light1 = 4;
int light2 = 5;
int v1=6,v2=7;
int sensorTA12 = A5;
// Analog input pin that sensor is attached to float
nVP[]={0.5,0.56,0.53,0.6,0.67,0.52,0.62,0.72,0.51};
nVP1[]={1.0,1.16,1.06,1.2,1.37,1.04,1.24,1.44,1.02};
/*float nVPP; // Voltage measured across resistor
float nCurrThruResistorPP;
// Peak Current Measuredgh Resistor float
nCurrThruResistorRMS;
// RMS current through Resistor float
nCurrentThruWire; */
// Actual RMS current in Wire*/
int curr1=2; int curr2=3;
int sensorTA122 = A4;
/*float nVPP2;
float nCurrThruResistorPP2; float
nCurrThruResistorRMS2;
float nCurrentThruWire2;
*/int i=0;
int cul1=0;
int cul2=0;
int sw1=A0;
char res[130];
  void serialFlush(){ while(Serial.available() > 0) {
    char tt = Serial.read();
    }}void sendmsg(char *num,char * msg)
{
    Serial.print("AT+CMGS=\"");
    Serial.print(num);
Serial.println("\"");delay(800);
Serial.println(msg);delay(800);
  //
```

```
    Serial.println(extr);Serial.println(extr1);delay(800)
    ; Serial.write(0x1a);delay(2000);
}
const char* number = "9618138448\0"; void setup()
{
b:lcd.begin(16,2);lcd.clear();
    lcd.clear();lcd.setCursor(0,
    0);lcd.print("WELCOME");
    char ret;
    Serial.begin(9600);  //GSM,GPS

    Serial.println("AT");delay(1000);
    Serial.println("AT+CMGF=1");delay(1000);
    Serial.println("AT+CNMI=1,2,0,0");delay(1000);
    Serial.println("AT+CSMP=17,167,0,16");

    delay(1000); delay(1000);
   pinMode(light1,OUTPUT);
pinMode(light2,OUTPUT); pinMode(v1,OUTPUT);
pinMode(v2,OUTPUT);
pinMode(sensorTA12, INPUT);
pinMode(sensorTA122, INPUT);
pinMode(sw1,INPUT_PULLUP);
pinMode(curr1, INPUT);
pinMode(curr2, INPUT); digitalWrite(light1,LOW);
digitalWrite(light2,LOW); digitalWrite(v1,HIGH);
digitalWrite(v2,HIGH); Serial.begin(9600);
//digitalWrite(light1,LOW);
//digitalWrite(light2,LOW);
delay(1100);
while(1)
{
static int i; digitalWrite(curr1, LOW);
digitalWrite(curr2, LOW); cul1= digitalRead(curr1);
cul2= digitalRead(curr2);/*if(cul2==HIGH)
{
lcd.clear();//lcd.setCursor(0, 0);
lcd.print("T1-C:");lcd.print(nVP[i]);
lcd.print("");lcd.setCursor(0, 1);
lcd.print("Over Load");//lcd.print(nVP[i]);
lcd.print(" "); delay(500);
digitalWrite(v1,HIGH); digitalWrite(v2,LOW);
delay(3000); digitalWrite(v1,LOW);
digitalWrite(v2,HIGH); digitalWrite(light1,HIGH);
digitalWrite(light2,HIGH); delay(500);
sendmsg(number,"Over Load");
//digitalWrite(v1,HIGH); delay(500);
while(1);
}delay(3000);
*/int sw = digitalRead(sw1); if(sw==LOW)
{lcd.clear();
lcd.setCursor(0, 0);lcd.print("SHORT CKT");
digitalWrite(light1,LOW); digitalWrite(light2,LOW);
delay(5000); digitalWrite(light1,HIGH);
digitalWrite(light2,HIGH); digitalWrite(v2,LOW);
delay(3000); digitalWrite(v2,HIGH);
sendmsg(number,"SHORT CKT");
while(digitalRead(sw1)==LOW);
digitalWrite(light1,LOW); digitalWrite(light2,LOW);
} if(cul1==HIGH && cul2==HIGH)
{  lcd.clear(); lcd.setCursor(0, 0);
lcd.print("T1-C:");lcd.print(nVP[4]);lcd.print("  ");
lcd.setCursor(0, 1);
lcd.print("T2-C:");lcd.print(nVP1[5]);lcd.print(" ");
delay(1000);
digitalWrite(light1,HIGH);
digitalWrite(light2,HIGH); lcd.clear();
lcd.setCursor(0, 0);
lcd.print("TF1 & TF2 OVER LOAD");
lcd.print(" ");lcd.setCursor(0, 1);lcd.print(nVP[i]);
lcd.print(" ");lcd.print(nVP1[i]);
sendmsg(number,"TF1 & TF2 OVER LOAD");
delay(4000);
goto b;
} if(cul1==LOW && cul2==LOW)
{  lcd.clear();
lcd.setCursor(0, 0);lcd.print("T1-C:");
lcd.print("0.0");lcd.print(" ");
lcd.setCursor(0, 1);
lcd.print("T2-C:");lcd.print("0.0");
lcd.print(" ")
// delay(4000); delay(1000);
} if(cul1==HIGH && cul2==LOW)
{
    lcd.clear(); lcd.setCursor(0, 0);
    lcd.print("T1-C:");lcd.print(nVP[4]);
    lcd.print(" ");  lcd.setCursor(0, 1);
    lcd.print("T2-C:");lcd.print("0.0");
    lcd.print(" ");  delay(3000);
digitalWrite(light1,HIGH);
digitalWrite(light2,HIGH); digitalWrite(v1,LOW);
delay(3000); digitalWrite(v1,HIGH);
  //gsmmegsend1(kq,1);
```

```
lcd.clear();
lcd.setCursor(0, 0);
lcd.print("TF1 OVER LOAD");
lcd.print(" ");
lcd.setCursor(0, 1);
lcd.print(nVP[i]);lcd.print(" ");
sendmsg(number,"TF1 OVER LOAD");
  delay(5000);
    goto b;
    } if(cul1==LOW && cul2==HIGH )
{
lcd.clear(); lcd.setCursor(0, 0);
lcd.print("T1-C:");lcd.print("0.0");
lcd.print(" "); lcd.setCursor(0, 1);
lcd.print("T2-C:");lcd.print(nVP1[i]);
lcd.print("            "); delay(3000);
digitalWrite(light1,HIGH);
digitalWrite(light2,HIGH); digitalWrite(v1,LOW);
delay(3000); digitalWrite(v1,HIGH);
  // gsmmegsend1(kq,2); lcd.clear();
lcd.setCursor(0, 0);lcd.print("TF2 OVER LOAD");
lcd.print(" ");lcd.setCursor(0,1);
  lcd.print(nVP1[i]);lcd.print(" ");
  sendmsg(number," TF2 OVER LOAD");
  delay(5000);
goto b;
} i++;if (i==10) {i=0;}
}} void loop()
{  // lcd.setCursor(0, 0);
lcd.print("T1-C:");
lcd.print(nVP[i]);lcd.print("            ");
// lcd.setCursor(0, 1);
lcd.print("T2-C:");lcd.print(nVP[i]);
lcd.print(" ");
/*while(i>=1); nVPP = getVPP();
   //Use Ohms law to calculate current across resistor
   and express in mA
 nCurrThruResistorPP = (nVPP/200.0) * 1000.0;
 // Use Formula for SINE wave to convert to RMS
nCurrThruResistorRMS = nCurrThruResistorPP *
0.707;
 // Current Transformer Ratio is 1000:1... Therefore
current through 200 ohm resistor is multiplied by
1000 to get input current
  nCurrentThruWire = nCurrThruResistorRMS *
1000;
Serial.print("Volts Peak : "); Serial.println(nVPP,3);
Serial.print("Current Through Resistor (Peak) : ");
Serial.print(nCurrThruResistorPP,3);
Serial.println(" mA Peak to Peak");
Serial.print("Current Through Resistor (RMS) : ");
Serial.print(nCurrThruResistorRMS,3);
Serial.println(" mA RMS");
Serial.print("Current Through Wire :");
Serial.print(nCurrentThruWire,3);
Serial.println(" mA RMS"); Serial.println();
nVPP2 = getVPP2();
//Use Ohms law to calculate current across resistor
and express in mA
nCurrThruResistorPP2 = (nVPP2/200.0) * 1000.0;
// Use Formula for SINE wave to convert to RMS
nCurrThruResistorRMS2 = nCurrThruResistorPP2 *
0.707;
// Current Transformer Ratio is 1000:1... Therefore
current through 200 ohm resistor is multiplied by
1000 to get input current
 nCurrentThruWire2 = nCurrThruResistorRMS2 *
1000;
Serial.print("Volts Peak2 : ");
Serial.println(nVPP2,3);
Serial.print("Current Through Resistor (Peak) 2");
Serial.print(nCurrThruResistorPP2,3);
Serial.println(" mA Peak to Peak2");
Serial.print("Current Through Resistor (RMS2)");
 Serial.print(nCurrThruResistorRMS2,3);
Serial.println(" mA RMS2");
Serial.print("Current Through Wire 2");
Serial.print(nCurrentThruWire2,3); Serial.println("
mA RMS2"); Serial.println();
if(nCurrentThruWire > 250 )
{
digitalWrite(light1,LOW); digitalWrite(v1,LOW);
lcd.clear();lcd.setCursor(0, 1);
lcd.print("T1:OVER LOAD");
delay(5000);
digitalWrite(light1,HIGH); digitalWrite(v1,HIGH);
} if(nCurrentThruWire2 > 250 )
{
digitalWrite(light2,LOW); digitalWrite(v2,LOW);
lcd.clear();lcd.setCursor(0, 1);
lcd.print("T2:OVER LOAD");
delay(5000);
digitalWrite(light2,HIGH); digitalWrite(v2,HIGH);
```

```
} else
{ digitalWrite(light1,HIGH);
}*/ //}//while
} //loop float getVPP()
{
float result; int readValue;
//value read from the sensor int maxValue = 0;
// store max value here uint32_t start_time = millis();
while((millis()-start_time) < 1000) //sample for 1 Sec
{
readValue = analogRead(sensorTA12);
// see if you have a new maxValue if
(readValue > maxValue)
{
/*record the maximum sensor value
*/ maxValue = readValue;
}
}} float getVPP2()
{
float result2; int readValue2;
//value read from the sensor int maxValue2 = 0;
// store max value here uint32_t start_time2 =
millis();
while((millis()-start_time2) < 1000) //sample for 1
Sec
{
readValue2 = analogRead(sensorTA122);
// see if you have a new maxValue if (readValue2 >
maxValue2)
{
/*record the maximum sensor value*/ maxValue2 =
readValue2;
}}
```

X CONCLUSION

The future system operates with GSM based hardware. These Arduino based have power over system is considered and come into being which provides to the find fault with identification as favorably as it is accomplished to payment the faults. That in general charge of this future system is the key of profit to that in good word to the conventional system.

XI REFERENCES

1. using Arduino with Voice Alert" International Journal of Innovations in Engineering and Technology, Volume 6 Issue 2 December 2015
2. Michael Margolis "Arduino Cookbook" Hand Book Edition 2011
3. Arduino – Home Page from http://www.arduino.cc.
4. GSM - https://www.engineersgarage.com/articles/gsm-gprs-modules
5. Voice Circuit https://www.engineersgarage.com/contribution/high-quality-voice-recorder-using-ic-apr33a
6. Voice circuit interface with Arduino http://forum.arduino.cc/index.php?topic=206878.0
7. M.A.Date, Bhuvanesh Oza, N.C.Nair "Power System Protection" Hand Book Edition 2002
8. Adil Naseem, Naveed Alam " Protection Of Distribution Transformer Using ARDUINO Platform" Science International Journal;
9. Cristina Ciulavu, Elena Helerea "Power Transformer Incipient Faults Monitoring "Annals of University of Cariova, Electrical Engineering; ISSN 1842-4805
10. Ishant Sharma, Tarak Patel, Prof. Dhaval Tailor "Differential Protection of Transformer Using Arduino" International Journal of Innovative and Emerging Research in Engineering Volume 3, Issue 7, 2016
11. Don Wilcher, "Learn Electronics with Arduino", illustrated Edition, Apress.

AUTHOR'S BIOGRAPHY

T,PadhaSaradhi was born in Vijayawada in 1989 He was obtained the B Tech Degree in Electrical and Electronics Engineering from Dr.Paul Raj Engineering College in the Year 2010. He Completed M Tech in st.mary's

Engineering College in the year of 2015. Currently he was Working as an Asst Prof in Sree Vahini Institute of Science and Technology. He presented few papers in national conferences and published one paper in inter national jurnal.

Ch.Bala Sai Vara Prasad Was Born 1998 in Jaggayyapet. He Completed his Inter in MPC at JRC Jr.College in 2016.Currently he Pursuing B Tech in EEE at Sree Vahini Institute of Science and Technology.

N. Raja Was Born 1998 in Jalapavarigudem. He Completed his Inter in MPC at APSWR Jr.College in 2016. Currently he Pursuing B Tech in EEE at Sree Vahini Institute of Science and Technology.

P.Nazzer Was Born 1998 in Koyyalagudem. He Completed his Inter in MPC at VSN Jr.College in 2016.Currently he Pursuing B Tech in EEE at Sree Vahini Institute of Science and Technology.

J. SaiMounika Was Born 1997 in Velvadam. She Completed her DIPLOMA in EEE at Sree Vahini Institute of Science and Technology in 2016.Currently She Pursuing B Tech in EEE at Sree Vahini Institute of Science and Technology.

T. BhagyaSri Was Born 1998 in Mylavaram. She Completed her DIPLOMA in EEE at Sree Vahini Institute of Science and Technology in 2016.Currently She Pursuing B Tech in EEE at Sree Vahini Institute of Science and Technology.