Journal of Engineering Sciences
Vol 11, Issue 5, MAY /2020
ISSN NO:0377-9254

Design and Implementation of 12V, 1A Switched Mode Power Supply On PCB using Ki_CAD

Mehaboob Mujawar, Assistant Professor
Department Of Electronics and Telecommunications Engineering,
Goa College of Engineering – Farmagudi, Goa

Abstract--- *A reliable and steady power supply unit is the fundamental need of every electronic device. This power supply unit is needed to convert the AC supply to a suitable level of DC voltage- hence acting as an AC to DC converter. The SMPS fabricated in this project would convert AC mains to 12V DC and has maximum current rating defined as 1.25A. The project aim is to construct a fully functioning independent SMPS circuit that can be adapted for 12V adapter or Mobile and Laptop chargers or to power minor devices. It also aims to create SMPS with a universal frequency range to facilitate operation- not just in India, but worldwide. The expected output of said SMPS is about 15 watts. The switching circuit is simple, consisting of a driver IC and a small transformer, making it a compact design. The project has the potential to simplify the high-frequency operation of a variety of devices at a nominal cost. It also takes into account the EMI caused by such high-frequency operation and also protects the device from any surges in the input. It also contains special arrangements for under-voltage lockdown protection. The objective of the project not only limits to the schematic of the said SMPS but extends to the fabrication of the PCB and practical verification of the data.*

Keywords--- *Fly back Converter, EN61000-Class 3 standard, Universal SMPS*

I. INTRODUCTION

The standard AC mains supply is used to power the majority of our DC loads. However, standard source voltages usually don't match the voltage levels required by various components like LEDs, microprocessors, motors, or other loads, especially when the source voltage is unregulated. To convert this AC to DC, or to bring down the DC high voltage level for application, SMPS proves to be helpful.

Switch-mode power supply, commonly abbreviated as SMPS is a device that supplies power to a load, with a switching action or by using inductors/capacitors. In this project, the team will use a switching IC to achieve this. SMPS can be seen in various day to day applications like CPU, chargers and so on.

Traditionally, SMPS provides a solution to the size issue of linear power supply due to the smaller size of the transformer at high frequencies.

SMPS can be of four basic types:

1) DC-DC Converter: The AC mains power is rectified and filtered as high-voltage DC, which is then fed to primary of the transformer. At the secondary winding, the rectified and filtered output voltage is collected.

2) Forward Converter: The inductor acts as a critical element which is always conducting. The diode inside the transistor carries the current during the OFF cycle. During the ON cycle, the inductor stores the energy. It also transfers a part of it to the output load.

3) Fly back Converter: When the switch is ON, the magnetic field of the inductor stores the energy. Similarly, when the switch is OFF the energy is transferred to the output.

4) Self-oscillating Fly back Converter: During conduction, the current primary starts growing linearly. This surge in current leads to the saturation in the circuit. The switching action begins to bring the circuit out of saturation.

The project uses DC to DC converter SMPS.

SMPSs are small in size, and highly efficient as the switching action does not waste energy. The cost is also low. Operating frequency is above the hearing range of human year, and hence the operation is noiseless. Further, the design considerations can be modified to vary the obtained output voltage.

However, the circuit is more complicated compared to a linear power supply. The high-frequency operation is also more prone to EMI. It is a challenge to keep the EMI levels into the permissible limits while working on this project. This will be elaborated in the design methodology.

SMPS is progressively replacing the linear power supply for industrial applications. As electronics engineers, this was a very intriguing device about which we needed more information. Making this SMPS readily available, and understanding its working was the main objective behind selecting this project.

II. LITERATURE SURVEY

A SMPS is a supply which converts electrical power from a given form to another as per the requirements. A SMPS gives a steady DC output when the input is AC or DC. It is a very adaptable and efficient technology.

Mehaboob Mujawar, Assistant Professor, Department of electronics and telecommunications engineering, Goa University, Ponda, India. E-mail:mehaboob311134@gmail.com.

The project [1] done by Jagdish and Dr. R.Jayapal titled Design and development of a universal SMPS deals with creating a SMPS that can accept and work using either AC or DC input. The project calls for the use of TOP258PG controller IC. The IC already has inbuilt components like MOSFETS, making the additional use of these redundant, hence the SMPS becomes compact. The output that is given by this particular SMPS is around 2V/ 2A DC. The input range is universal, around 85 V to 265 V AC or 75V to 375V DC.

The project [2] done by Özdemir, Erdem and Yazici titled An Application Study about SMPS Design and Reduction of Common Mode Noises deals with designing a traditional SMPS with three outputs, also the common-mode noise in the output of the SMPS is calculated and a filter is used to reduce this common mode noise. The end result achieved by doing this is that the common-mode noise in the SMPS output is considerably reduced. AC to DC conversion is done by this particular SMPS.

The project [3] done by Hardik Khambhadiya and Prof. P.N.Kapil titled "Design and implementation of the SMPS for IGBT Driver" designs a SMPS for an Insulated Gate Bipolar Transistor (IGBT). DC to DC conversion is done by this particular SMPS. The output of this SMPS is given as input to the IGBT. The supply required is both positive and negative DC to drive the IGBT. The input of the SMPS is 12V DC. The SMPS uses a PWM controller IC SG3525 which has push pull topology which gives us the ideal output. The output of the SMPS that is obtained is 15V and -5V DC. This is given as input supply to the IGBT.

My project deals with the design and development of a 12V 1A SMPS. This SMPS is an AC to DC converter. The input to the circuit is the AC mains power which is converted to a 12V DC by the SMPS circuit. The input range that is taken into consideration is such that the circuit is universally applicable. Applications include powering small loads and can be adapted into a mobile phone or laptop charger. The application of the project is such that it can be utilized by a lot of people

III. DESIGN METHODOLOGY

The project uses various components. Each one has a crucial function. First, the overview is given, after which the specific components are mentioned.

1. Input Specifications- The first thing that the SMPS requires is the input supply voltage that will feed the load. The primary function of this design is to convert AC to DC. The input AC voltage depends on the country the device is used. In India, the AC voltage value is 220V. The SMPS should work with a universal input voltage range, which can vary between 85V AC to 265V AC. For stable output in any country the voltage range should be between 85-265V. The frequency can range between 50-60 Hz, and this is the reason why we can charge our electronic devices in whichever country we are.
2. Output Specifications- The load on the output side can be resistive or inductive. Depending on the load, the SMPS can differ. For this SMPS, we have assumed the load to be resistive. However, there is nothing like a purely resistive load, it does have small amounts of inductance and capacitance, but we consider that as negligible. The output design depends upon the load. For this project, the SMPS could provide a 15W output. It is 12V and 1.25A.
3. Power Management IC- The SMPS circuit requires a Power Management IC, Our design requirements are: 12V 1.25A which is 15W , Input surge protection , Universal input rating , instant voltage operations ,Over-voltage protection , Over-current protection , Output short circuit protection.

For the above requirements we select a Power integration IC. Power integration is a semiconductor company which makes these IC's; I have decided to use the TNY268PN from tiny switch II families.

Detailed Specifications for sections are given below:

1. AC-DC conversion- We use a full bridge rectifier (DB107), we can use a four diode (1N4006/1N4007) bridge rectifier also.

2. PI filter- This design confirms EN61000-Class 3 standard; the design of the PI filter is such that it reduces the common-mode EMI rejection. It is made using two capacitors C1 and C2, and inductor L1. Both capacitors C1 and C2 are 400V 22 uF capacitors. To cancel differential EMI we use L1 which acts as a choke in common mode.

3. Driver circuitry or switching circuit- TNY268PN controls the transformers primary side. The switching frequency is 120-132khz. As bypass capacitor we use C3.

4. Clamp Circuit- For the clamp circuit, D1 and D2 are used. For D1, we use a TVS diode, and for D2, we use an ultra-fast recovery diode. For ultra-fast recovery, UF4007 is preferred, and for TVS operation, P6KE200A is used.

5. EMI filtering- The capacitor C4 is responsible for EMI filtering, which increases the immunity of the circuit from high EMI interference.

6. Secondary Rectifier and Snubber circuit- D6, which is a Schottky rectifier diode converts and rectifies the output from the transformer. The snubber circuit around D6 is used to suppress the transient voltage during the switching operations.

7. Filter Section- Filter capacitor C6 along with LC filter made using C7 and L2 for better ripple rejection..

IV. WORKING

The AC signal which is given at the input is converted to regulated DC output. The AC input is given to the bridge rectifier which converts it into Unregulated DC output. This output is given to the switching circuit. The switching circuit works at high frequencies like 15kHz to 50 kHz, it produces a DC pulsating wave.

Name of the component	Specification
DB107	Full bridge rectifier made up of four diodes(1N4006/1N4007)
C1, C2	400V, 22 µF Capacitors
L1	Choke in common mode, 6mH 1.6A
TNY266PN	Switching frequency is 120-132khz
Diode, D1	TVS operation, P6KE200A
Diode, D2	An ultra-fast recovery diode, UF4007
Diode, D6	A Schottky rectifier diode
C4	EMI filtering capacitor, 472M
PC817	Optocoupler IC
Fuse, F1	1A, 250VAC
Varistor, RV1	275V
R1, R2	1MΩ Resistors
L2	Inductor, 3.3µH,2.66A

Table: 1 value of components

This output is given to a step-down transformer which decreases the voltage level and then passes the stepped down DC pulsating wave to the filter circuit. Which gives us the regulated output DC signal, the feedback circuit is in place which takes the output to the switching circuitry. With this the switching cycles are calibrated to maintain constant output voltage for the SMPS. A SMPS is used instead of a Linear Power supply as a linear power supply becomes bulky if the current rating is increased.

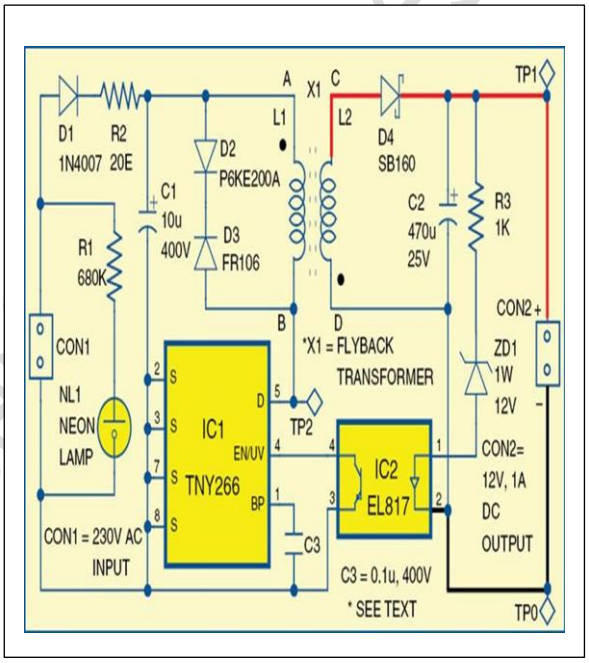

Figure 1. Circuit Diagram of the project

V. KI_CAD SOFTWARE DESIGN

Ki-CAD is very useful software to create the design of the circuits before it is actually implemented on the printed circuit board, available with wide variety of tools making the circuit design simpler. It basically consists of three main phases in software design, in the first phase we design the actual schematic circuit then the second phase consists of associating PCB footprints to schematic symbols and generating Netlist. The third phase consists of creating the PCB layout and generating Gerber files

For generating the schematic layout first we need to create a new file in Ki-cad then using the various tools available we can easily create the schematic layout and we can also modify the circuit according to our requirements like adding new symbols, changing the pin configuration of ICs and also we will be able to add or delete the symbols according to the desired circuit used in the project

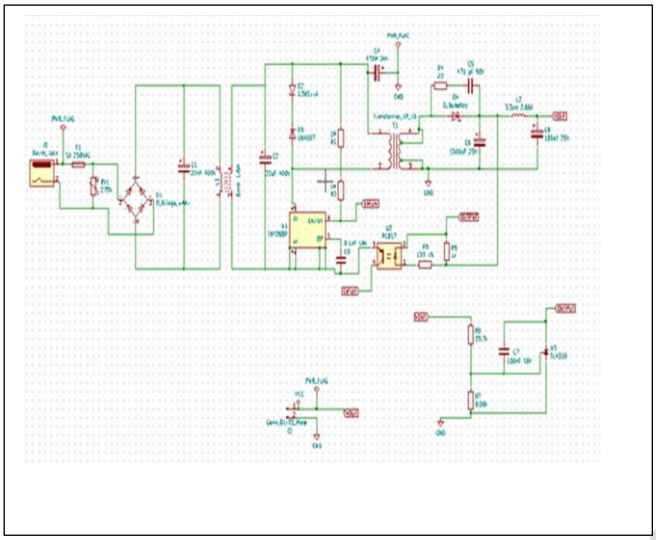

Figure 6. Schematic diagram of the circuit

The next step is to associate footprint to PCB layout, once footprints are assigned we can work on the PCB layout of the project by proper alignment of the components on the printed circuit board layout and also proper routes can be assigned, we can also see the actual PCB in 3D model and according to our requirements modifications can be done as shown below

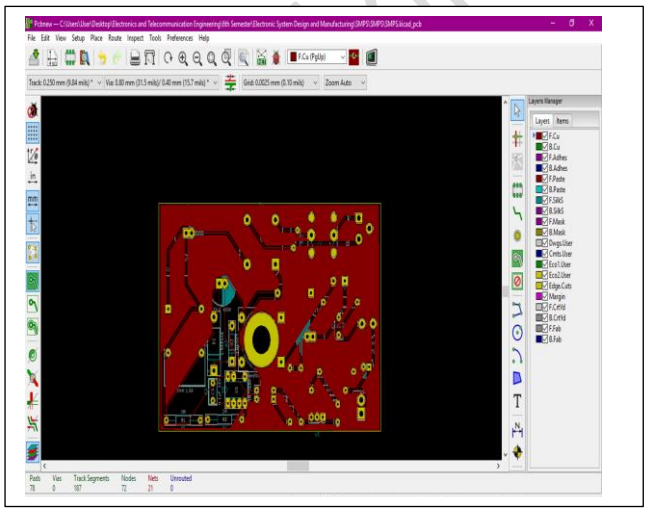

Figure 7. 2D image of the PCB layout

Once the PCB layout is ready, we have to work on the hardware PCB design. To proceed with the hardware PCB design, first the Gerber files are created, these Gerber files can be utilized to print the actual signal routes on the PCB Board. This process can be done at home or it can also sent to the companies with all the Gerber files attached , making PCB ready at home is much simpler and results in low cost but if the design involves many complex components then industrial PCB board routing and fabrication is the only option .

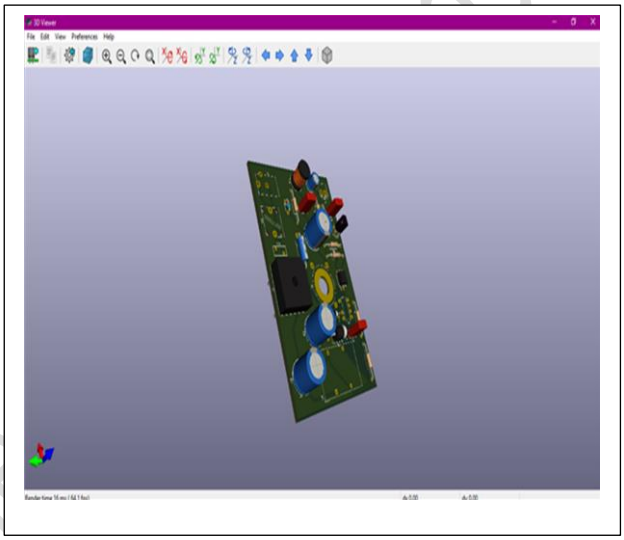

Figure 8. PCB 3D Model

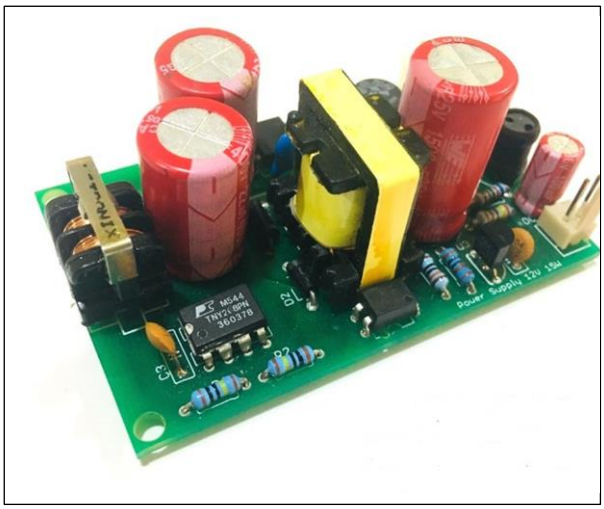

Figure 9. PCB prototype of the project

VI. CONCLUSION

I have designed an SMPS which gives 15w output. We have used TNY268PN from tiny Switch 2 families. To control the input surge I have used a slow blow fuse and a MOV (Metal Oxide Varistor).When there is high input voltage, MOV will go dead short and thus input fuse is blown. To provide under voltage lockout protection I have used R1 and R2 sense resistors. The transformer being a ferromagnetic one does the job of galvanic isolation. A capacitor is used for EMI filtering which improves the immunity of the circuit.

VII. FUTURE SCOPE

As this SMPS design does not take into consideration low voltage input values, one can do a study on that as certain applications require low input values.

As this SMPS does not take into consideration the inductance and capacitance of the load, one can do a study on that as well.

As EMI filters capacity to reduce the output noise is limited.

ACKNOWLEDGMENT

The author would like to take this opportunity to appreciate the contribution of Goa college of engineering (GEC) for its support and Faculties of ETC Department for their heartfelt support during the preparation of this paper.

REFERENCES

[1] Jagdish and Dr. R.Jayapal, "**Design and development of a universal SMPS**", International Journal of Advanced Research in Electrical,Electronics and Instrumentation Engineering, Vol. 6, Issue 8, August 2017.

[2] Özdemir, Erdem and Yazici, "**An Application Study about SMPS Design and Reduction of Common Mode Noises**", https://www.researchgate.net/publication/251910649, 18 January 2017.

[3] Hardik Khambhadiya and Prof. P.N.Kapil, "**Design and implementation of the SMPS for IGBT Driver**", International Journal of Trend in Research and Development, Volume 2(2), ISSN: 2394-9333 www.ijtrd.com, 11 May 2016.

[4] Danjiang Chen and Qiaowen Zhang, "**Research of a Wide Input Range SMPS",** International Journal of Computing Academic Research (IJCAR) ,ISSN 2305-9184, Volume 3, Number 1,(February 2014), pp. 21-26, © MEACSE Publications.

[5] A Azis H*, Cholish, Rimbawati and N Evalina, "**Comparative analysis between the switch mode power supply (SMPS) using IC Tl494cn transformer based on power supply Linear**", The 2nd International Conference on Engineering and Applied Technology IOP Conf. Series: Materials Science and Engineering 674 (2019) 012035 IOP Publishing doi:10.1088/1757-899X/674/1/012035.

[6] Satish kumar , sanjive sharma "comparative study of SMPS systems for industrial applications" proceedings of international conference on electrical engineering and allied sciences , 2016, page 72-78

[7] Mohammed kahir, ashraf sultan " SMPS model for cost effective applications" proceedings of national level symposium on electrical sciences and engineering Indonesia 2018, page 102-107

[8] James walter , michelle enrich, " scientific research article on SMPS for industrial applications" international journal of electrical sciences , ISSN 2547-78965, june 2017 , issue 4 , page 98-102

Mehaboob Mujawar received the B.E degree in Electronics and Telecommunications engineering in 2015 and M.E in Industrial Automation and Radio Frequency from Goa University in 2017. Currently working as Assistant Professor at Goa College of Engineering – Farmagudi. He has Participated and Presented several papers on Various Antenna designs in National and International Level Conferences. His area of interest is Microwave and RF Engineering.