Journal of Engineering Sciences
Vol 11, Issue 5, MAY /2020
ISSN NO:0377-9254

ADVANCED MULTIPURPOSE CONTROL SYSTEM

[1]**Dr.M.Sandhyarani,** Associate Professor, AAR Mahaveer Engineering College.
[2]**H.Anita,** Associate Professor, AAR Mahaveer Engineering College.
[3]**A. Akshay,** AAR Mahaveer Engineering College.
[4]**P. Abhijeet Patnaik,** AAR Mahaveer Engineering College.

Abstract: In this paper the theory of automation is used to control the difference of the society using Arduino. The main device in this paper is an Arduino board with some different sensor which helps us to control different application. An arduino along with some sensor controls the operation of automatic switching ON & OFF function. This allowed us to conserve the energy and also barriers on the wastage of the resources. The main objective of this project is to control the devices like motor and led lights automatically which makes some applications of the society to work automatically and makes the society more modernized and futuristic.

Keywords: Arduino, Motors, sensors, relay, switch.

1. INTRODUCTION

Automation systems are being preferred over the manual mode because it reduces the use of energy. These automation systems play an essential role in making our daily life more comfortable and facilitate user from ceiling fans to washing machine. Among all the existing application there are the few other application which plays some important role like "Automatic Gardening, Automatic water Tank controlling and Automatic street light controlling" and etc.

In this paper the above three applications are used to make the society more advance and futuristic. As the name itself given indicates that the things will done without any human interaction. In the process of automatic gardening the water supply works automatically whenever the garden requires water or when garden is filled with water, the water supply stops. The automatic water tank also work similarly when the water tank is empty motor automatically runs and when the tank is filled with water the motor get stop automatically. In the automatic street lights the street lights gets turn on when its night and off when its day time automatically.

1.1 AUTOMATION

Automation, the application of machines to tasks once performed by human beings or, increasingly, to tasks that would otherwise be impossible. Although the term mechanization is often used to refer to the simple replacement of human labor by machines, automation generally implies the integration of machines into a self-governing system. Automation has revolutionized those areas in which it has been introduced, and there is scarcely an aspect of modern life that has been unaffected by it. The term automation was coined in the automobile industry about 1946 to describe the increased use of automatic devices and controls in mechanized production lines. The origin of the word is attributed to D.S. Harder, an engineering manager at the Ford Motor Company at the time. The term is used widely in a manufacturing context, but it is also applied outside manufacturing in connection with a variety of systems in which there is a significant substitution of mechanical, electrical, or computerized action for human effort and intelligence.

In general usage, automation can be defined as a technology concerned with performing a process

by means of programmed commands combined with automatic feedback control to ensure proper execution of the instructions. The resulting system is capable of operating without human intervention. The development of this technology has become increasingly dependent on the use of computers and computer-related technologies. Consequently, automated systems have become increasingly sophisticated and complex. Advanced systems represent a level of capability and performance that surpass in many ways the abilities of humans to accomplish the same activities.

Automation technology has matured to a point where a number of other technologies have developed from it and have achieved a recognition and status of their own. Robotics is one of these technologies; it is a specialized branch of automation in which the automated machine possesses certain anthropomorphic, or humanlike, characteristics. The most typical humanlike characteristic of a modern industrial robot is its powered mechanical arm. The robot's arm can be programmed to move through a sequence of motions to perform useful tasks, such as loading and unloading parts at a production machine or making a sequence of spot-welds on the sheet-metal parts of an automobile body during assembly. As these examples suggest, industrial robots are typically used to replace human workers in factory operations.

1.2 Principles and Theory of Automation

The three basic building blocks of automation: (1) a source of power to perform some action, (2) feedback controls, and (3) machine programming. Almost without exception, an automated system will exhibit all these elements.

Feedback controls:

Feedback controls are widely used in modern automated systems. A feedback control system consists of five basic components: (1) input, (2) process being controlled, (3) output, (4) sensing elements, and (5) controller and actuating devices. These five components are illustrated in Figure 1. The term closed-loop feedback control is often used to describe this kind of system.

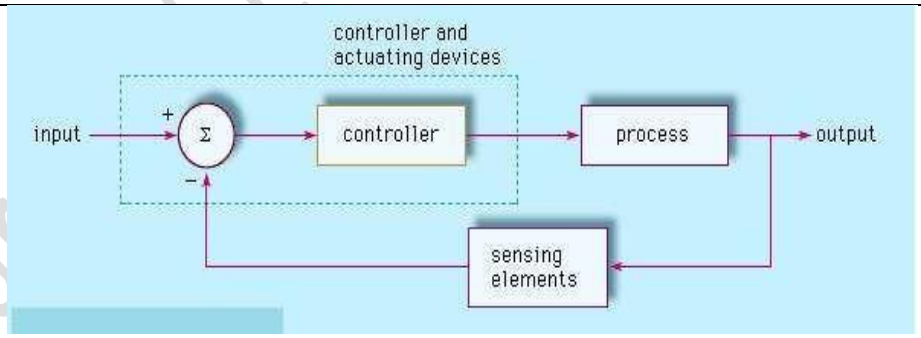

Fig 1.1: The components of a feedback control system and their relationships.

The input to the system is the reference value, or set point, for the system output. This represents the desired operating value of the output. Using the previous example of the heating system as an illustration, the input is the desired temperature setting for a room. The process being controlled is the heater (e.g., furnace). In other feedback systems, the process might be a manufacturing operation, the rocket engines on a space shuttle, the automobile engine in cruise control, or any of a variety of other processes to which power is applied. The output is the variable of the process that is being measured and compared to the input; in the above example, it is room temperature.

The sensing elements are the measuring devices used in the feedback loop to monitor the value of the output variable. In the heating system example, this function is normally accomplished using a bimetallic strip. This device consists of two metal strips joined along their lengths. The two metals possess different thermal expansion coefficients; thus, when the temperature of the strip is raised, it flexes in direct proportion to the temperature change. As such, the bimetallic strip is capable of measuring temperature. There are many different kinds of sensors used in feedback control systems for automation.
The purpose of the controller and actuating devices in the feedback system is to compare the measured output value with the reference input value and to reduce the difference between them. In general, the controller and actuator of the system are the mechanisms by which changes in the process are accomplished to influence the output variable. These mechanisms are usually designed specifically for the system and consist of devices such as motors, valves, solenoid switches, piston cylinders, gears, power screws, pulley systems, chain drives, and other mechanical and electrical components. The switch connected to the bimetallic strip of the thermostat is the controller and actuating device for the heating system. When the output (room temperature) is below the set point, the switch turns on the heater. When the temperature exceeds the set point, the heat is turned off.

1.3 Machine programming:

The programmed instructions determine the set of actions that is to be accomplished automatically by the system. The program specifies what the automated system should do and how its various components must function in order to accomplish the desired result. The content of the program varies considerably from one system to the next. In relatively simple systems, the program consists of a limited number of well-defined actions that are performed continuously and repeatedly in the proper sequence with no deviation from one cycle to the next. In more complex systems, the number of commands could be quite large, and the level of detail in each command could be significantly greater. In relatively sophisticated systems, the program provides for the sequence of actions to be altered in response to variations in raw materials or other operating conditions. Programming commands are related to feedback control in an automated system in that the program establishes the sequence of values for the inputs (set points) of the various feedback control loops that make up the automated system. A given programming command may specify the set point for the feedback loop, which in turn controls some action that the system is to accomplish. In effect, the purpose of the feedback loop is to verify that the programmed step has been carried out. For example, in a robot controller, the program might specify that the arm is to move to a designated position, and the feedback control system is used to verify that the move has been correctly made. The relationship of program control and feedback control in an automated system is illustrated in Figure 2.

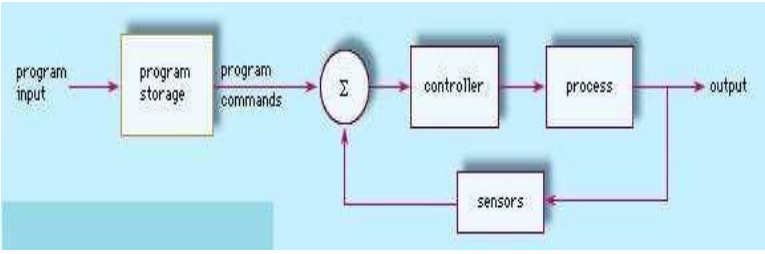

Fig 1.2: Relationship of program control and feedback control in an automated.

Some of the programmed commands may be executed in a simple open-loop fashion—i.e., without the need for a feedback loop to verify that the command has been properly carried out. For example, a command to flip an electrical switch may not require feedback. The need for feedback control in an automated system might arise when there are variations in the raw materials being fed into a production process, and the system must take these variations into consideration by making adjustments in its controlled actions. Without feedback, the system would be unable to exert sufficient control over the quality of the process output.

2. Implementation

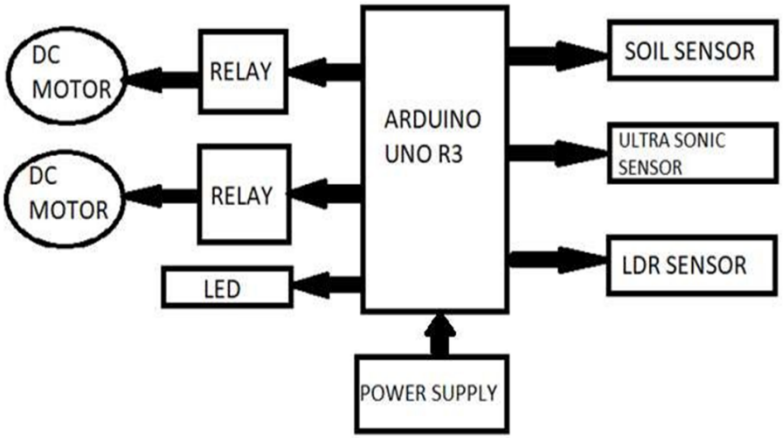

Fig .2. Block Diagram Working of Advance Multi purpose Control System.

The above given figure is the block diagram representation between all the three major unit of the advance multipurpose control system. In the above block diagram the sensor unit i.e., soil sensor, ultrasonic sensor and the ldr sensor work as the input unit whereas the dc motors, relay and led lights work as the output components. And both the input and output unit are connected with the Arduino which act as an control unit.

AUTOMATIC GARDENING SYSTEM

In gardening the moisture sensor is connected with the Arduino, when the garden does not have the sufficient amount of water then the moisture sensor sends signal to the Arduino which command and operate the dc motor to sprinkle the water in the garden.

And when the garden have the sufficient amount of water it stops working.

Block diagram:

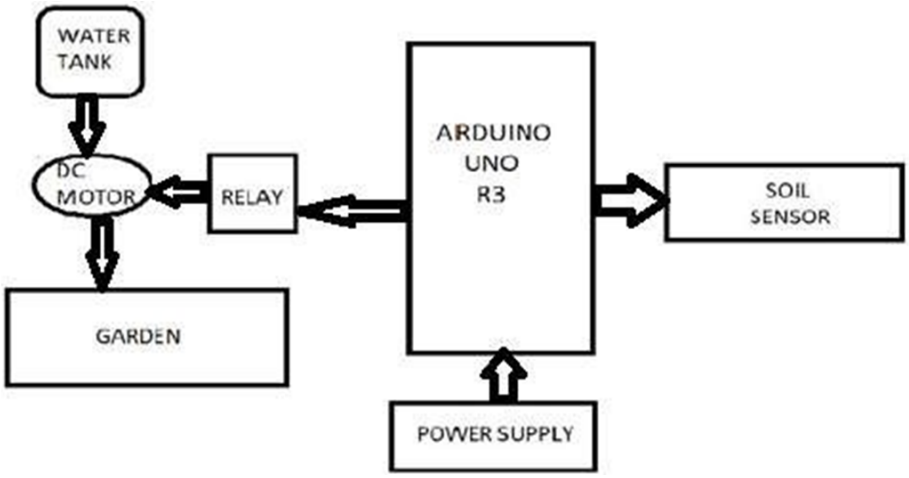

Fig. 2.1. block diagram of automatic gardening.

AUTOMATIC WATER TANK CONTROLLING

The ultrasonic sensor which is connected with the Arduino along with the LCD display, It is programmed in such a way that the sensor display the distance between the sensor and water in LCD display. When the water reaches to the maximum point the Dc motor turn off automatically or when the water level is at minimum point the Dc motor turn on automatically.

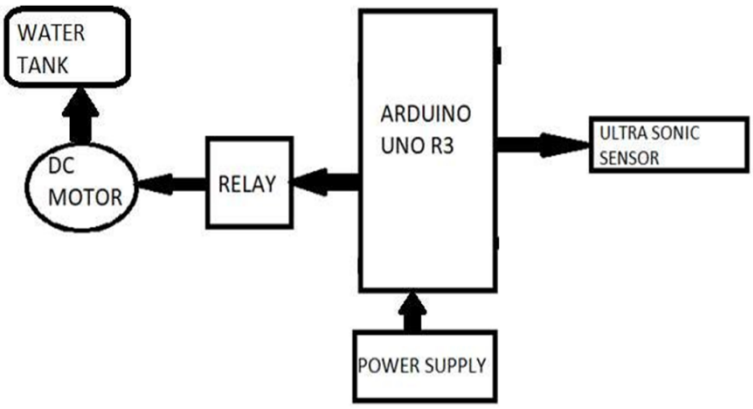

Fig.2.2. block diagram for automatic water tank controlling.

AUTOMATIC STREET LIGHT CONTROLLING:

Here in the automatic street light controlling system the LDR module is used to detect the light and dark. The LDR module is connected with the poles of the street light, at the time of sunset when the sky become dark the street light will be turned on automatically.

Block diagram for automatic street light controlling:

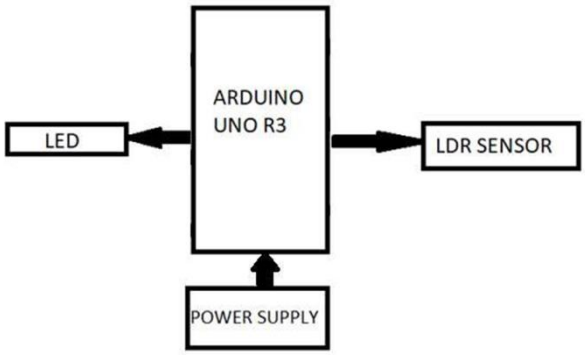

Results & Analysis

This project is mainly design for the automation is used to control the different parameter of the society using one single Arduino. This project satisfies that the applications of Advance Multipurpose Controlling System do not require any type of human interruption, which helps the society in many ways with their features.

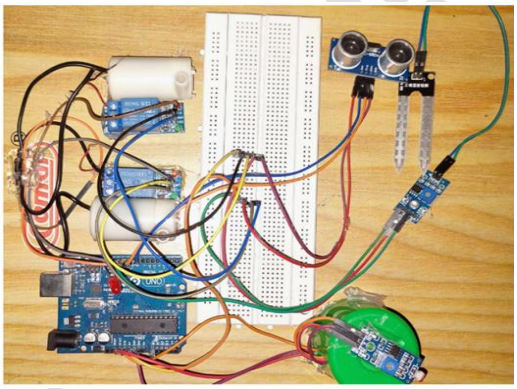

Fig.3. overview of Advance multipurpose control system

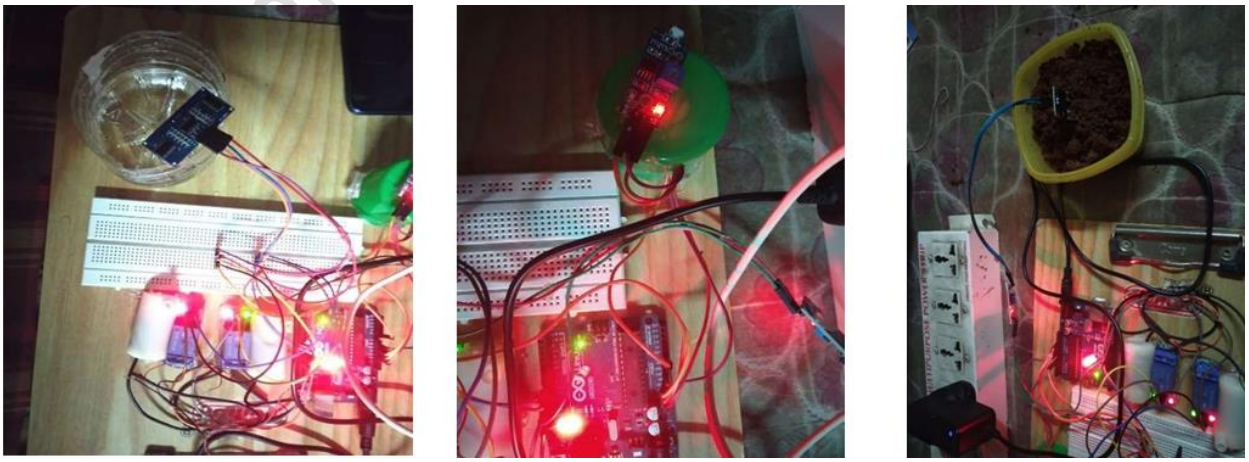

Fig.3.1. (a) Automatic water tank, (b) Automatic street light, (c) Automatic gardening

APPLICATIONS, ADVANTAGES

AUTOMATIC GARDENING SYSTEM

- Ability to read soil volumetric water contain directly.
- No special maintenance necessary.
- Low cost.
- Rainy climate may damage the equipment.

AUTOMATIC WATER TANK CONTROLLING

- Automatic turn ON/OFF pumps.
- Can be used in factories and commercial complexes.
- Oil tank level gauging.
- Continues requirement of power supply.

AUTOMATIC STREET LIGHT CONTROLLING

- No need of man power for maintenance.
- Faster response.
- LDR's are sensitive, inexpensive and easily available device. They have good power and voltage handling capacities.
- During the false weather condition it may turn on and off automatically.

CONCLUSION

The project has been successfully designed and tested. Integrating features of all the hardware components used have developed it. Presence of every module has been reasoned out and placed carefully thus contributing to the best working of the unit. Secondly, using highly advanced IC's and with the help of growing technology the project has been successfully implemented. The proposed advance multipurpose control system is a cost effective and the safest way to reduce.

Power consumption. It helps us to get rid of today's world problems of manual switching and most importantly primary cost and maintenance can be decreased easily. This project is mainly for advance techniques and for modernization of society. The main aim of doing this project is to make improvement in our society and make everywhere clean and green, so we have introduced this project which can control all the three aspects which can control automatically. This system can easily implemented in street lights, smart cities, home automation, field monitoring, timely automated lights, societies and industries etc.

FUTURE SCOPE

The Advance multipurpose controlling system can be used further for making the cities & towns more modernized by adding the new features as per the further requirement's. The applications implemented under this system carry some disadvantages and technical issues which can be overcome by replacing the components or adding some extra features in it.

REFERENCES

1. Aurdino and its working text book by STEVE GOLD.
2. For all the Arduino programing related and coding stuff follow the tutorials provided by udemy.com.
3. For automatic gardening system and its circuit connections refer Arduino project hub.
4. For automatic water tank control system and its circuit connections follow the Azar Electronic youtube.
5. For automatic street light controlling and its circuit connections refer Arduino project hub.
6. Sensors and acthuator by CLARENCE W.DE SILVA.
7. Sensor and other hardware equipment modern electronics Koti.