Journal of Engineering Sciences
Vol 11, Issue 6,June/2020
ISSN NO:0377-9254

ANALYSIS AND LOCATION OF FAULTS FOR UNDERGROUND CABLES USING ARDUINO

K Nageswara Rao[1], K Sivasatyanarayana[2], K Prasanthi[3] ,B.Ganesh[4] , K Bharath[5] , and KVS Manikanta[6]

[1]*Assoc Professor of EEE Department, SVIST, Tiruvuru, India.*

[2,3,4] *UG Student, EEE Department, SVIST, Tiruvuru, India.*

Abstract— Owing to underground pressures, wear and tear, rats etc., underground cables are vulnerable to a wide range of faults. It is also difficult to find source of fault and to dig the whole line to test the whole line and repair faults. So here we are proposing cable fault detection over IOT which detects the exact location of fault over IOT which makes repair work very fast. The repairers know exactly which part is at fault and only that area is to be dug to find the cause of the fault. This saves a great deal of time , money and energy, and also enables faster operation of underground cables. We are using IOT technology that updates the fault details being monitored to the Internet. With the aid of the future divider network through the cable, the device detects fault. Whenever a fault is formed at a point where two lines are shortened together, a particular voltage is produced according to the combination of the network resistors. The microcontroller senses this voltage, and is updated to the user. The details transmitted to the consumer is knowledge regarding the identification of faults. The microcontroller retrieves the fault line data and displays it on the LCD monitor, as well as transmitting this data to the Gmail server.

1. INTRODUCTION

The project is installed with a set of cable length resistors in KM's and a set of switches is created at each known KM to test the accuracy of the same. The fault occurring at a given distance and the respective phase is displayed on a microcontroller interfaced LCD, Cables have been designed to lay overhead until the last decades and there is actually an underground cable that is superior to the previous process. Since no adverse weather conditions like hurricane, snow, heavy rainfall, as well as pollution do not affect the underground cable. But when there is a fault in the cable, so it's hard to find the fault. Most common practice practiced in many metropolitan areas is the underground cable network. When fault happens for whatever reason, the process of repairing related to that specific cable is complicated at that time as it does not know the exact position of the fault in the cable. Cable fault is replicated as:

- Any defect,
- Inconsistency,
- Weakness or non-homogeneity that affects performance of cable
- Current is diverted from the intended path

For several decades underground cables have been used for most of the worldwide regulated low voltage and medium voltage distribution lines. Increasingly, subterranean high voltage cables are being used to reduce the vulnerability of delivery networks to environmental impact. Because of the advantages of underground connection, underground cables were widely used in power distribution networks, involving more security in bad weather than overhead lines, less likely to damage by storms or lightning. It is cheaper for shorter ranges, environmentally friendly and low maintenance.

But if any fault occurs in the cable, then the fault is hard to locate. And this software is used for digitally detecting the location of the fault. The requirement to identify the defective point in an underground cable is to encourage faster repair, increase reliability of the network and the the failure time. The underground cable network is very useful for distribution, particularly in metropolitan cities, airport services, and defence. There are more than one million miles of electrical cables strung overhead across the country.

Add to that at least a few million telephone and cable television lines and it's no wonder that every year hurricanes, tornadoes, fires and ice storms wreak havoc on the electrical systems. This causes outages of utilities which last days, weeks and longer. Outages of power over prolonged periods pose critical health and safety

issues and economic losses. Concerns about the reliability of overhead lines, increased maintenance and operational costs, and public safety and quality of life concerns are causing more and more utilities and communities to recognize that the safest way to provide high-quality service to their customers is to move overhead distribution lines to underground. Including reduced operating and maintenance costs, reduced tree trimming costs, less storm damage and decreased loss of daily energy revenue as consumers lose power following storms, underground offers potential benefits for utility companies. Often there are innovative funding options available to make the dream of underground a reality. The underground cable network, particularly in metropolitan cities, airports and defense service, is very important for distribution.

2.BLOCK DIAGRAM

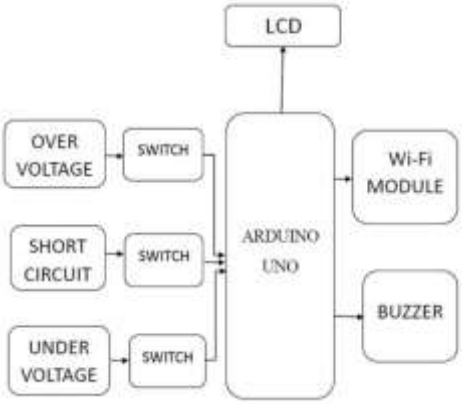

2.1 ARDUINO

Arduino is a prototype platform (open-source) based on an easy-to-use hardware and software. It consists of a circuit board, which can be programmed (referred to as a microcontroller) and a ready-made software called Arduino IDE (IntegratedDevelopment Environment), which is used to write and upload the computer code to the physical board.

Arduino boards are able to read analog or digital input signals from different sensors and turn it into an output such as activating a motor, turning LED on/off, connect to the cloud and many other actions. You can control your board functions by sending a set of instructions to the microcontroller on the board via Arduino IDE (referred to as uploading software). Arduino provides a standard form factor that breaks the functions of the micro-controller into a more accessible package.

Arduino is used as a smart microcontroller that performs two major tasks. First it experiences sunlight and second it controls the traced solar panels to get maximum power. It recognizes the controlled data from the batteries and solar panels to adjust the charger mode accordingly. So we will be using Arduino microcontroller because of its high concert and low power feeding.

2.2 OVER VOLTAGE

This type of fault is better than short circuit fault, because the current flow through an underground cable becomes zero when the open circuit fault occurs. This fault may occur in conducting path disruption.

These faults arise when one or more phase conductors split when the voltage in a circuit or part of it increases above its upper design limit, this is referred to as overvoltage.

2.3 SHORT CIRCUIT

Short circuit failure can be broken down into two forms, namely symmetric and Unsymmetrical faults In this type of fault three phases are short-circuited. Because of this reason this type of fault is also called as a three-phase fault. A short circuit is an electrical circuit which allows a current to travel along an unintended path with no or very low impedance of electricity. This causes excessive current to flow through the circuit A short circuit is essentially a low-resistance connection that supplies electrical power to any circuit between the two conducers. This results in excessive current flow through the 'short' in the power source, and may even cause destruction of the power source.

2.4 UNDER VOLTAGE

Under voltage is defined as a condition where, for at least 1 minute, the applied voltage drops to 90 per cent or less of the rated voltage. Low-voltage conditions occur when an installation requests more power than the line can deliver. If the voltage in a circuit or part of it exceeds its lower design limit, this is known as under voltage .

2.5 LCD

A liquid crystal display (LCD) is a thin , flat display device consisting of any number of

color or monochrome pixels displayed in front of a reflector or light source. Each pixel consists of a column of liquid crystal molecules suspended between two transparent electrodes and two polarizing filters, perpendicular to each other's axes of polarity. Light passing through one would be blocked by the other without the liquid crystals in between. The liquid crystal twists the light polarization which enters one filter in order to allow it to pass through the other. A program must interact with the outside world through input and output devices that directly communicate with a human being. An LCD display is one of the most common devices anchored to a controller. Some of the most common controller-connected LCDs are displays with 16X1, 16x2, and 20x2. This means 16 characters per line through 1 line 16 characters per line through 2 lines, and 20 characters per line through 2 lines, respectively. Many devices of microcontrollers use 'smart LCD' displays for the visual information output. LCD displays designed around the LCD NT-C1611 module are inexpensive , easy to use and the 5X7 dots plus display cursor can even be used to generate a readout.

2.6 Wi-Fi Module

The ESP8266 is a low cost Wi-Fi module,which can be easily integrated into IoT devices. We used this module to feature many projects, such as How to Make Smart Home Electronics: A Smart Mailbox and How to Read Your Arduino 's Mind: Creating A Childproof Door. This tutorial will direct you through setting up the Wi-Fi module ESP8266 which can be used with Arduino. The ESP8266 comes with various functionalities in several versions. We will concentrate on the ESP8266 ESP-01 module, available as the most popular and simple one. The ESP8266 is a tiny Wi-Fi module designed around the ESP8266 processor, which can wirelessly link your microcontroller to the Internet for a very low cost. It can be a great choice for Internet of Things (IoT) projects, but for inexperienced hobbyists who have no previous experience with the app, it can be challenging to work with We hope to show you in this tutorial how to integrate the ESP8266 with an Arduino and perform some simple functions such as connecting it to a Wi-Fi network.

ESP-01 Features

- 802.11 b/g/n
- Integrated TCP/IP protocol stack
- Integrated TR switch, balun, LNA, power amplifier and matching network
- Integrated PLLs, regulators, DCXO and power management units
- +19.5dBm output power in 802.11b mode
- Power down leakage current of <10uA
- 1MB Flash Memory
- Integrated low power 32-bit CPU could be used as application processor
- SDIO 1.1 / 2.0, SPI, UART
- STBC, 1×1 MIMO, 2×1 MIMO
- A-MPDU & A-MSDU aggregation & 0.4ms guard interval
- Wake up and transmit packets in < 2ms
- Standby power consumption of < 1.0mW (DTIM3)

3. IMPLEMENTATION DETAILS

This project is designed to achieve monitoring of underground cable and to provide information about detected fault. like Over voltage, under voltage, short circuit and open circuit. Here we are doing the proto type project for analysis of fault detection and its location for underground cables by using Arduino uno microcontroller.

Faults created here manually by using the switches. Here each switch is defined as 1km, in this switches circuit we have six switches. Three switches are placed in single line like this we make three lines like a, b, and c on board. Each switch phase is connected to Arduino uno microcontroller analog and digital pins similarly ground is connected to the Arduino uno microcontroller ground.

The 230V supply is first stepped down to 12V AC using a step down transformer. This is then converted to DC using centre tap full wave rectifier. The AC ripples is filtered out by using a capacitor and given to the input pin of this regulator. At output pin of this regulator we get a constant 5v DC which is used for microcontroller and other ICs in this project.

Here one command is given to the Arduino uno microcontroller, that is whenever the switch is pull down then Arduino uno reads the command after that it gives a result in the form of fault through the actuators.

Here LCD, buzzer and wi-fi module are connect as an output that means actuators. whenever the fault is created that fault displayed on the screen similarly buzzer gives the beep sound and also wi-fi module continually every second

monitoring.Whenever the command is read by the Arduino uno microcontroller, it updates the information to the LCD for displaying the fault information and also it gives the beep sound by the buzzer similarly wi-fi module updates the information on the monitor.

Underground cables are prone to a wide variety of faults due to underground conditions, wear and tear, rodents etc. Also detecting fault source is difficult and entire line is to be dug in order to check entire line and fix faults. So here we propose cable fault detection over IOT that detects the exact fault position over IOT that makes repairing work very easy.

The repairmen know exactly which part has fault and only that area is to be dug to detect the fault source. This saves a lot of time, money and efforts and also allows to service underground cables faster. We use IOT technology that updates the monitored fault information to wi-fi. Whenever we switch the switch down and give a command to the Arduino uno microcontroller. then, depending upon the programme in the Arduino uno microcontroller and it shows us the fault in actuators.

So this project is used to detect the location of fault in digital way. The requirement of locating the faulty point in an underground cable in order is to facilitate quicker repair, improve the system reliability and reduced outage period. The underground cable system is very useful for distribution mainly in metropolitan cities, airport and defence.

Fault detection over IOT that detects the exact fault position over IOT that makes repairing work very easy. The repairmen know exactly which part has fault and only that area is to be dug to detect the fault source. This saves a lot of time, money and efforts and also allows to service underground cables faster.

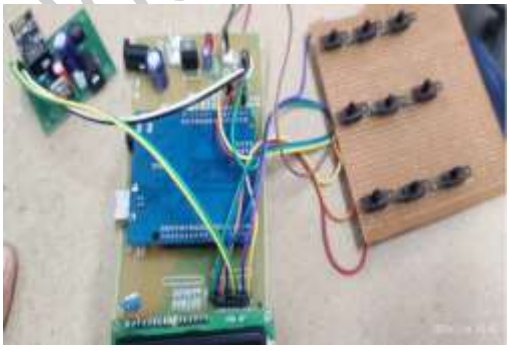

Fig 1.1 HardWare Connection Diagram

3.1 ADVANTAGES

- This includes aesthetics, higher public acceptance, and perceived benefits of protection against electromagnetic field radiation (which is still present in underground lines), fewer interruptions, and lower maintenance costs.
- Failure rates of overhead lines and underground cables vary widely, but typically underground cable outage rates are about half of their equivalent overhead line types. Potentially far fewer momentary interruptions occur from lightning, animals and tree branches falling on wires which de-energize a circuit and then reenergize it a moment later.
- Potentially-Reduced Maintenance and Operating Costs
- Lower storm restoration cost
- Lower tree-trimming cost
- Increased reliability during severe weather wind related storm damage will be greatly reduced for an underground system, and areas not subjected to flooding and storm surges experience minimal damage and interruption of electric service.
- Less damage during severe weather
- Far fewer momentary interruptions
- Improved utility relations regarding tree trimming
- Improved Public Safety:
- Fewer motor vehicle accidents
- Reduced live-wire contact injuries
- Fewer Fires

3.2 APPLICATION

- Its main application is the detection of underground cable fault which is very hard to detect as it is not possible to see such faults which are quite possible in the case of overhead transmission line. So for such cases our project is very helpful as the distance at which the fault has occurred can be calculated and then further action regarding the fault can be taken to overcome them.

4. CONCLUSION

Underground Cable Fault Locator 's hardware concept is being applied, and promising tests have been carried forward. This model of hardware can locate the exact location of the fault within an underground cable. Owing to underground conditions, wear and tear, rodents etc., underground cables are prone to a wide range of faults. It is also difficult to detect source of fault

and to dug the entire line to check the whole line and fix faults. So here we propose cable fault detection over IOT which detects the exact position of fault over IOT which makes repair work very easy. The repairers know exactly which part is at fault and only that area is to be dug to detect the source of the fault. This saves a great deal of time , money and effort, and also allows faster service of underground cables. We use IOT technology that updates the monitored fault information to wi-fi module. Whenever a fault gets created at a point shorting two lines together, a specific voltage gets generated as per the resistors network combination. This voltage is sensed by the microcontroller and is updated to the user. The information conveyed to the user is the information regarding faults detection. **5.REFERENCES**

1.Jitendra pal Singh, Sanjana Singh, Toshiba Singh & mohd. Shahrukh—underground cable fault distance locator. International Journal of Scientific Research and Management Studies (IJSRMS) Vol 3 , pg: 21-26

2. Priyanka R, Priya B "Underground Cable Fault Detection" Published in International Journal of Trend in Research and Development (IJTRD), ISSN: 2394-9333, Volume-3 | Issue-3 , June 2016, URL:

3. M.-S. Choi, D.-S. Lee, and X. Yang, ―A line to ground fault location algorithm for underground cable system,‖ KIEE Trans. Power Eng., pp. 267–273, Jun. 2005.

4. E. C. Bascom, ―Computerized underground cable fault location expertise, ‖in Proc. IEEE Power Eng. Soc. General Meeting, Apr. 10–15,1994, pp. 376–382.J. Clerk Maxwell, A Treatise on Electricity and Magnetism, 3rded., vol. 2. Oxford: Clarendon, 1892, pp.68–73.

5. K.K. Kuna, Prof. K. Warwick, ―Real-time expert system for fault location on high voltage underground distribution cables‖, IEEE PROCEEDINGS-C, Vol. 139, No. 3, MAY 1992.

6. J.Densely, ―Ageing mechanisms and diagnostics for power cables—an overview,‖ IEEE Electr. Insul. Mag., vol. 17, no. 1, pp. 14–22, Jan./Feb. 2001.

7. T. S. Sidhu and Z. Xu, ―Detection of incipient faults in distribution underground cables‖, IEEE Trans. Power Del., vol. 25, no. 3, pp. 1363–1371, Jul. 2010.

8. Tar lochan S. Sidhu, ZhihanXu, ―Detection of Incipient Faults in Distribution Underground Cables‖, IEEE Transactions on Power Delivery, Vol. 25, NO. 3, JULY 2010.

9. Md. Fakhrul Islam, Amanullah M T Oo, Salahuddin. A. Azad1 , ―Locating Underground Cable Faults: A Review and Guideline for New Development‖ , 2013 IEEE

10. Sawatpipat, P., Tayjasanant, T., "Fault classification for Thailand's transmission lines based on discrete wavelet transform", International Conference on Electrical Engineering/Electronics Computer Telecommunications and Information Technology (ECTICON),Page(s): 636 – 640, 2010.62

11. M. Jaya Bharata Reddy, D. Venkata Rajesh, D.K. Mohanta,"Robust transmission line fault classification using wavelet multi-resolution analysis.", Computers & Electrical Engineering, Volume 39, Issue 4, Pages 1219-1247. , May 2013

12. Ali Rafinia, Jamal Moshtagh, " A new approach to fault location in three-phase underground distribution system using combination of wavelet analysis with ANN and FLS ", International Journal of Electrical Power & Energy Systems, Volume 55, Pages 261-274 , February 2014.