Journal of Engineering Sciences
Vol 11, Issue 7,July/2020
ISSN NO:0377-9254

A REVIEW ON FLEXIBLE MANUFACTURING SYSTEM A MODERN TECHNOLOGY IN MANUFACTURING

CHATURBHUJ SRIVASTAVA[1]
M.Tech Student
Department of Mechanical Engineering
I.E.T. Dr. R. L. Avadh University
Ayodhya
srivastavatwinkle67@gmail.com[1]

AKHIL VIKRAM YADAV[2] and ANURAG SINGH[3]
Assistant Professor
Department of Mechanical Engineering
I.E.T. Dr. R. L. Avadh University
Ayodhya
akhilvikramyadav92@gmail.com[2]
anuragsingh@rmlau.ac.in[3]

Abstract

A Flexible Manufacturing System is a manufacturing system in which the degree of flexibility that allows a system to respond in the case of changes, whether predicted or unpredicted. Flexibility is the speed at which a system can react to and accommodate change. the flexibility must exist during the whole life cycle of a produce material, from design to manufacturing to distribution of the product. Flexible Manufacturing System is a computerized controlled system that can produce more number of parts or products in any Order, idle time. The flexibility is generally considered into two the group, which both contain numerous subgroups. The first group, Machine, covers flexibility the system's ability to be changed to produce new type product, and to change the order of operations doing on a job. The second group is called routing flexibility, in which the ability to use multiple type machines to executed the same operation on a job, and also the system's ability to absorb large-scale changes, such as in volume, capacity, or capability and size. Flexible manufacturing system consist of an integrated system of computerized numerically controlled(CNC) machine tool ,automated material handling system operating under the controlled computer workstation, storage etc. This paper focuses on the advantages, Disadvantages, level of FMS, layout of the FMS and also overviewed of other aspect of FMS.

Keyword- Flexible Manufacturing System, computerized numerically controlled (CNC), layout of FMS, level of FMS, Material handling system.

I. Introduction

At the turn of the twentieth century, Flexible Manufacturing System did not exist. There was no pressing need for efficiency because the markets were national and there was no foreign competition. Manufacturers could tell the consumers what to buy. During that period, Henry Ford had been quoted as saying "People can order any color of car as long as it is black." All the power remained in the hands of the manufacturer and the consumers hardly had any choices.

However, after the Second World War a new era in manufacturing was to come. The discovery of new materials and production techniques increased quality and productivity. The war led to the emergence of open foreign markets and new competition. The focus of the market shifted from manufacturer to consumer. The first Flexible Manufacturing System was patented in 1965 by Theo Williamson who made numerically controlled equipment. Examples of numerically controlled equipment are like CNC lathes or mills which are varying types of FM systems. During the 1970s, with the ever-growing developments in the field of technology, manufacturers started facing difficulties and hence, FM systems became main-stream in manufacturing to accommodate new changes whenever required. During the 1980s for the first time manufacturers had to take in consideration efficiency, quality, and flexibility to stay in business.

II. Flexibility Concept and Different approaches

Today flexibility means to produce reasonably priced customized products of high quality that can be quickly delivered to customers.

Approach	Flexibility meaning
Manufacturing	• The capability of producing different parts without major retooling • A measure of how fast the company converts its process (es) from making an old line of products to produce a new product • The ability to change a production schedule, to modify a part, or to handle multiple parts
Operational	• The ability to efficiently produce highly customized and unique products
Customer	• The ability to exploit various dimension of speed of delivery
Strategic	• The ability of a company to offer a wide variety of products to its customers
Capacity	• The ability to rapidly increase or decrease production levels or to shift capacity quickly from one product or service to another

Table -01

III. levels of manufacturing flexibility

There are three levels of manufacturing flexibility.

A. Basic flexibilities

- Machine flexibility - the ease with which a machine can process various operations
- Material handling flexibility - a measure of the ease with which different part types can be transported and properly positioned at the various machine tools in a system
- Operation flexibility - a measure of the ease with which alternative operation sequences can be used for processing a part type.

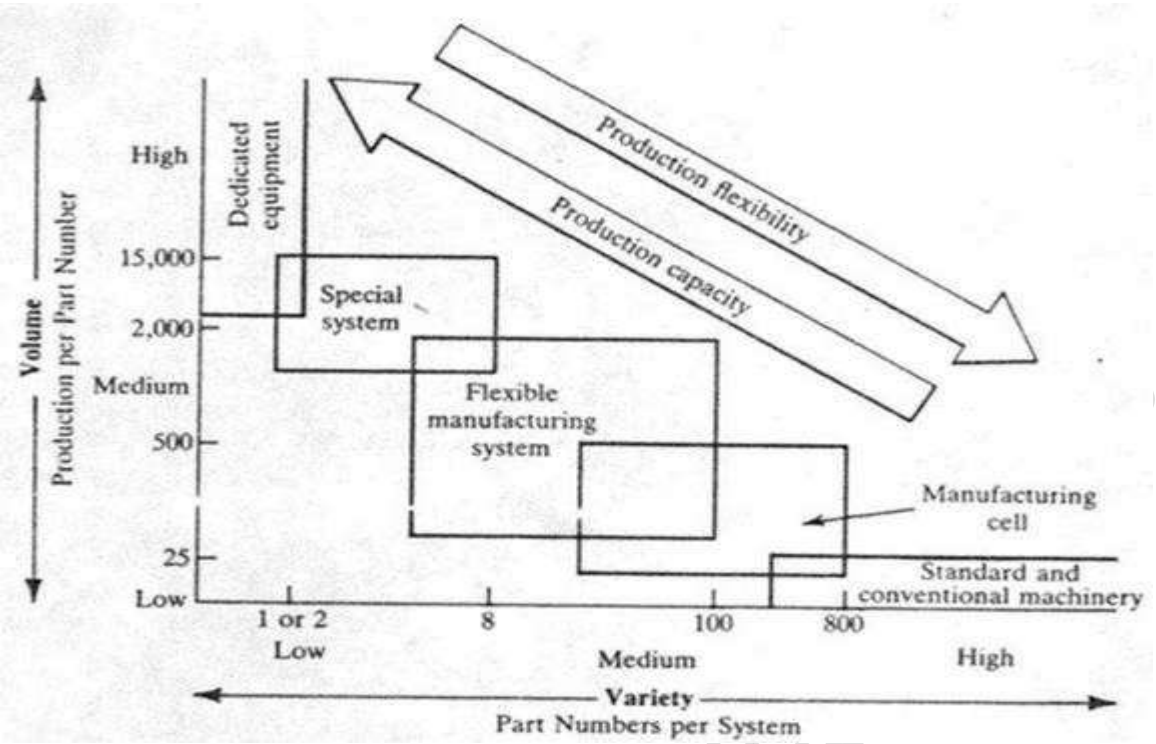

Figure-1

B. System flexibilities

- Volume flexibility - a measure of a system's capability to be operated profitably at different volumes of the existing part types
- Expansion flexibility - the ability to build a system and expand it incrementally
- Routing flexibility - a measure of the alternative paths that a part can effectively follow through a system for a given process plan
- Process flexibility - a measure of the volume of the set of part types that a system can produce without incurring any setup
- Product flexibility - the volume of the set of part types that can be manufactured in a system with minor setup

C. Aggregate flexibilities

- Program flexibility - the ability of a system to run for reasonably long periods without external intervention
- Production flexibility - the volume of the set of part types that a system can produce without major investment in capital equipment
- Market flexibility - the ability of a system to efficiently adapt to changing market conditions

IV.Flexible Manufacturing Systems (FMS) Components

The components of FMS are written in below-

- Workstations
- Automated Material Handling and Storage System
- Computer Control System
- Inspection Equipment
- Many other components.

A. Workstations

The processing or assembly equipment used in an FMS depends on the type of work accomplished by the system. In a system designed for machining operations, the principle types of processing station are CNC machine tools. However, the FMS concept is also applicable to various other processes as well. Following are the types of workstations typically found in an FMS.

Load/Unload Stations- The load/unload station is the physical interface between the FMS and the rest of the factory. Raw work-parts enter the system at this point, and finished parts exit the system from here. Loading and unloading can be accomplished either manually or by automated handling systems. Manual loading and unloading is prevalent in most FMSs today. The load/unload station should be ergonomically designed to permit convenient and safe movement of work parts.

Machining Stations- The most common applications of FMSs arc machining operations, The workstations used in these systems are therefore predominantly CNC machine tools. Most common is the CNC machining center. the horizontal machining center. CNC machining centers possess features that make them compatible with the FMS, including automatic tool changing and tool storage, use of palletized work-parts, CNC, and capacity for distributed numerical control (DNC). Machining centers can be ordered with automatic pallet changers that can be readily interfaced with the FMS part handling system. Machining centers are generally used for non-rotational parts. For rotational parts, turning centers are used.

Other Processing Stations- he FMS concept has been applied to other processing operations in addition to machining. One such application is sheet metal fabrication processes. The processing workstations consist of press-working operations, such as punching, shearing, and certain bending and forming processes.

B. Material Handling and Storage System-

The second major component of an FMS is its material handling and storage system. In this subsection, we discuss the functions of the handling system, material handling equipment typically used in an FMS, and types of FMS layout.

Functions of the Handling System.

The material handling and storage system in an FMS performs the fol1owing functions:

- Random, independent movement of work-parts between stations.
- Handle a variety of work-part configurations
- Temporary storage
- Convenient access for loading and unloading work-parts
- Compatible with computer control.

Material Handling Equipment- The material handling function in an FMS is often shared between two systems: (1) a primary handling system and (2) a secondary handling system. The primary handling system establishes the basic layout of the FMS and is responsible for moving work-parts between stations in the system.

The secondary handling system consists of transfer devices, automatic pallet changers. and similar mechanisms located at the workstations in the FMS. The function of the secondary handling system is to transfer work from the primary system to the machine tool or other processing station and to position the parts with sufficient accuracy and repeatability to perform the processing or assembly operation. Other purposes served by the secondary handling system include: (1) reorientation of the work-part if necessary to present the surface that is to be processed and (2) buffer storage of parts to minimize work change time and maximize station utilization. In some FMS installations, the positioning and requirements at the individual workstations are satisfied by the primary work handling system.

The primary handling system is sometimes supported by an automated storage system (Section: An example of storage in an FMS is illustrated in Figure. The FMS is integrated with an automated storage/retrieval

system (AS/RS), and the S/R machine serves the work handling function for the workstations as well as delivering parts to and from the storage racks.

V. FMS Layout Configurations

The material handling system establishes the FMS layout. Most layout configurations found in today's FMSs can he divided into five categories:

- Inline layout
- Loop layout
- Ladder layout.
- Open field layout
- Robot-centered cell.

A. Inline layout-

In the inline layout, the machines and handling system are arranged in a straight line, as illustrated in Figure. In its simplest form. the parts progress from one workstation to the next in a well-defined sequence, with work always moving in one direction and no back flow, as in Figure. The operation of this type of system is similar to a transfer line.

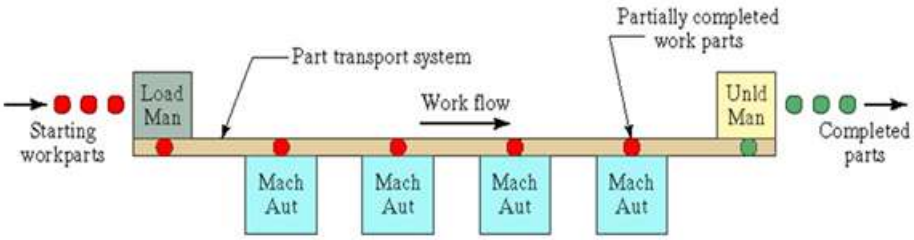

Figure-02

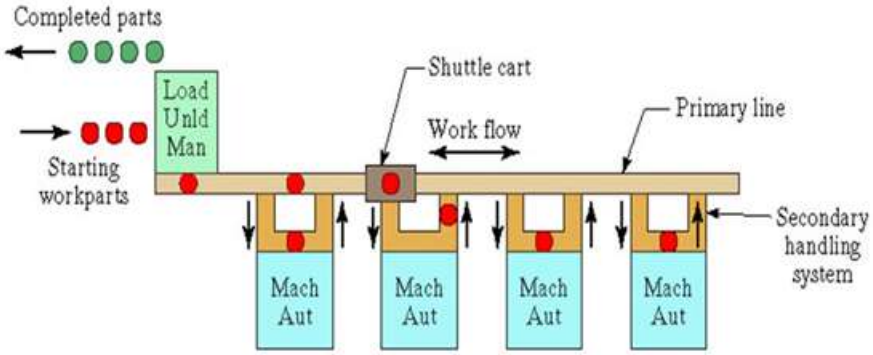

Figure- 03

B. Loop layout-

the workstations are organized in a loop that is served by II part handling system in the same shape, as shown in Figure. Parts usually flow in one direction around the loop, with the capability to stop and be transferred to any station.

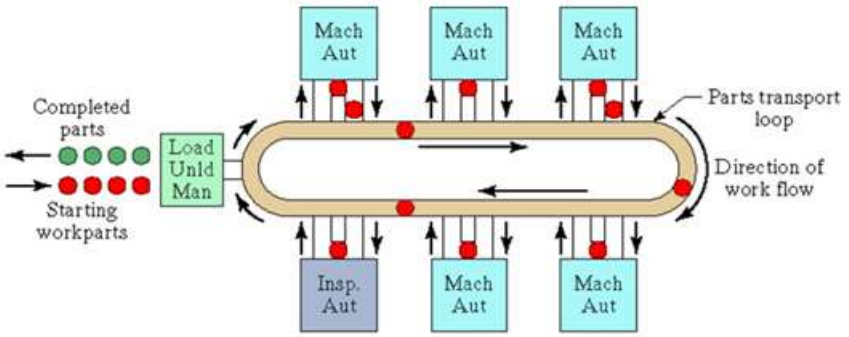

Figure- 04

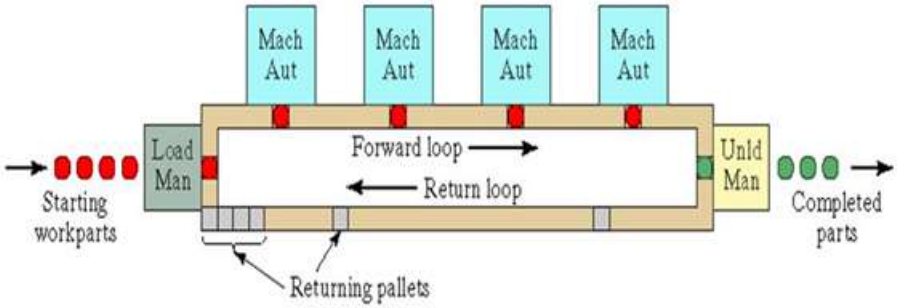

Figure- 05

C. ladder layout-

Ladder layout consists of a loop with rungs between the straight sections of the loop, on which workstations are located, as shown in Figure. The rungs increase the possible ways of getting from one machine to the next, and obviate the need for a secondary handling system. This reduces average travel distance and minimizes congestion in the handling system, thereby reducing transport time between workstations.

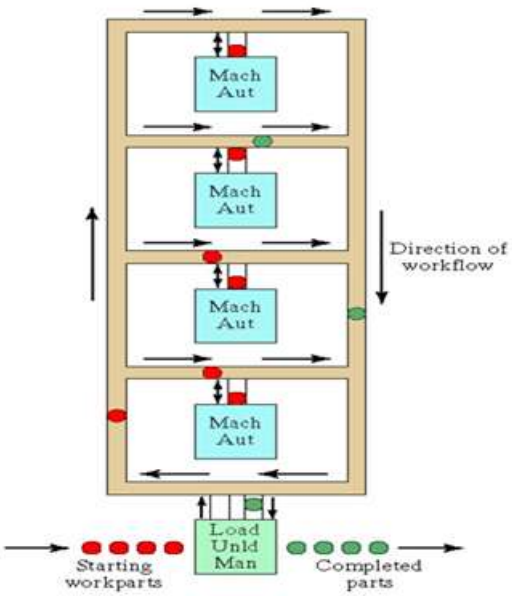

Figure- 06

D. Open field layout

The open field layout consists of multiple loops and ladders and may include sidings as well. as illustrated in Figure. This layout type is generally appropriate for processing a large family of parts. The number of different machine types may be limited, and parts are routed to different workstations depending on which one becomes available first.

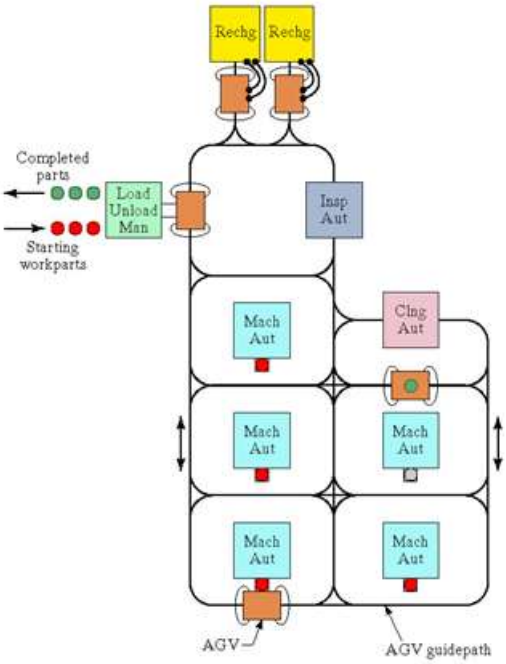

Figure-07

E. Robot-centered cell-

The robot-centered cell uses one or more robots as the material handling system. Industrial robots can be equipped with grippers that make them well suited for the handling of rotational parts, and robot centered FMS layouts are often used to process cylindrical or disk shaped parts.

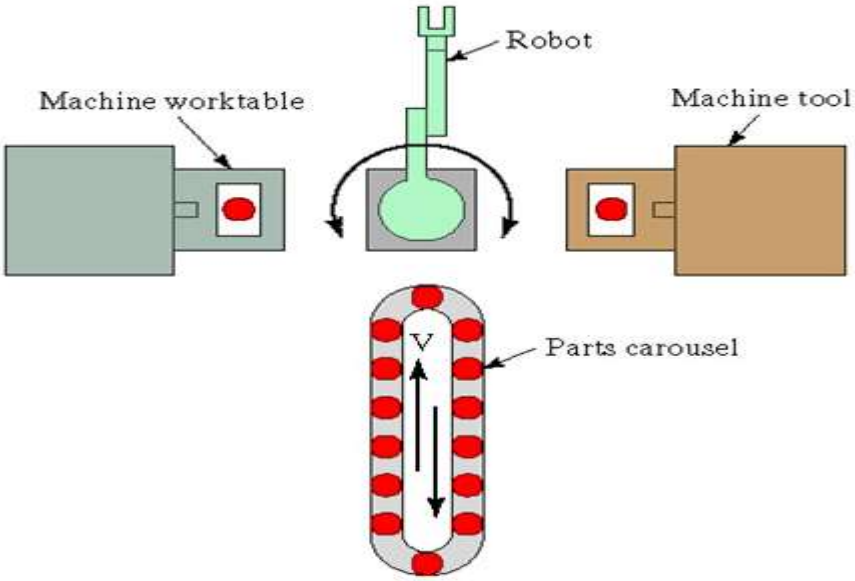

Figure -08

VI. Advantages and disadvantages of FMSs implementation

Advantages

- Faster, lower- cost changes from one part to another which will improve capital utilization.
- Lower direct labor cost, due to the reduction in number of workers.

- Reduced inventory, due to the planning and programming precision.
- Consistent and better quality, due to the automated control.
- Lower cost/unit of output, due to the greater productivity using the same number of workers.
- Savings from the indirect labor, from reduced errors, rework, repairs and rejects.

Disadvantages

- Limited ability to adapt to changes in product or product mix (ex. machines are of limited capacity and the tooling necessary for products, even of the same family, is not always feasible in a given FMS).
- Expensive, costing millions of dollars.
- Technological problems of exact component positioning and precise timing necessary to process a component.
- Sophisticated manufacturing systems.

VII. Conclusion

Flexible manufacturing systems (FMS) allows for flexible production of products on a single production system. The flexible technical systems belong to the modular and modular systems. It is integrated and for counter driven complex NC machines, automated handling equipment for materials and tools and complex automated measuring and test equipment, which with minimum manual intervention and with minimal time for adjustment can produce each of the amounts belonging to specific groups of components within the framework of its production capacity and a predetermined plan

REFERENCES

[1]. Goyal, S.K., Mehta, K., Kodali, R. And Deshmukh, S.G. (1995). Simulation for analysis of scheduling rules for a flexible manufacturing system. Integrated manufacturing system, 6(5), pp 21-26.
[2]. Kumar, A., Prakash, Tiwari, M.K., Shankar, R. and Baveja, A. (2006). Solving machine-loading problem of a flexible manufacturing system with constraint-based genetic algorithm. European
[3]. Mehrjerdi, Y. (2009) A decision-making model for flexible manufacturing system, Assembly Automation, 29(1), pp 32-40.
[4]. SHANKAR, K., and SRINIVA SULU, A., 1989, some solution methodologies for loading problems in flexible manufacturing system, International Journal of Production Research, 27 (6), 1019-1034.
[5]. Jeong K and Kim Y. (1998) A Real-time Scheduling Mechanism for a Flexible Manufacturing System: Using Simulation and Dispatching Rules. The International Research of Production Research. 36(9), pp. 2609-262.
[6]. STECKE, K.E., 1983, Formulation and solution of non-linear integer production planning problem for flexible manufacturing system, Management Science, 29(3), 273-288.
[7]. Ketokivi, M. (2006). Elaborating the contingency theory of organizations: the case of manufacturing flexibility strategies. Production & Operations Management, 15, pp 215-28
[8]. Welgama, P. S., and Gibson, P. R., 1995, "A hybrid knowledge based/optimization system for automated selection of materials handling system", Computers in Industrial Engineering, Vol. 28,No. 2, pp. 205-217.
[9]. Priore P, Fuente D, Gomez A and Puente J. (2001) A Review of Machine Learning in Dynamic Scheduling of Flexible Manufacturing Systems. Artificial Intelligence for Engineering Design, Analysis and Manufacturing, 15(3), pp. 251 – 263.
[10]. Venkatesh, K., and Ilyas, M., 1993, "Modeling, controlling and simulation of local area networks for flexible manufacturing systems using Petri Nets", Computers and Industrial Engineering, Vol.25, Nos. 1-4, pp. 155-158.
[11]. Heragu, S. S., and Kusiak, A, 1990, "Machine layout: an optimization and knowledge basedapproach", International Journal of Production Research, Vol. 28, No. 4, pp. 615-635.
[12]. Konak, A. Konak, S.K. and Azizoglu, M. (2008). Minimizing the number of tool switching instants in Flexible Manufacturing Systems. International journal of production economics. 116, pp 298-307.

[13]. Houshyar, A., and White, B., 1993, "Exact optimal solution for facility layout: Deciding which pairs of locations should be adjacent", Computers and Industrial Engineering, Vol. 24, No. 2, pp. 177-187.

[14]. Tamini, A.M., Abidi, M.H., Mian, S.H. and Alam, j. (2012). Analysis of performance analysis of FMS in Manufacturing industries