Journal of Engineering Sciences

Vol 11, Issue 7,July/2020

ISSN NO:0377-9254

ROBOTIC VECHILE CONTROLLED BY USING DTMF

[1]Ch.Navaneeth kumar ,[2]Kaushal kumar jha,[3]V.Diwakar
Students smsk
navaneethkumar8374@gmail.com[1],kaushaljha91328@gmail.com[2],diwakarvadde7755@gmail.com[3]

ABSTRACT

In this article,vehicle is controlled by the Robot using Dual Tone Multi Frequency (DTMF) technology.Now a days DTMF technology is most useful technique in Robotic vehicle control. It is worked on to methods digital signal processing (DSP). Wireless-control of robots uses RF circuit that has the drawbacks of limited working range and limited control. This DTMF is gives advantage over the RF; it increases the range of working and also gives good results in case of motion and direction of robot using mobile phone through micro controller. This type of wireless communication gives the remote handling operation of Robot using DTMF and with the help of the motor driver we will control vehicle directions.

Keywords:DTMF,Microcontroller, Motor driver,Binary sequence DTMF.

I.INTRODUCTION:

A robot is electro-mechanical machine which is guided by computer, Mobile phone or programming, and is thus able to do tasks on its own. The Robot Institute of America define "A robot is a reprogrammable multifunctional manipulate to designed to move material parts, tools or specialized device through variable programmed motions for variety Conventionally, wireless controlled robots use Circuits which have drawbacks of limited working range frequency range, use of mobile phones can over It provides the advantages of robust control, working range as large as the coverage area of the service provider, no interference with other controller DTMF Mobile ROBOT is a machine that can be controlled with a mobile. In this work, the robot is controlled by a mobile phone that makes a call to the mobile phone attached to the robot. In the course of a call, if any button is pressed, a tone corresponding to the button pressed is heard at the other end of the call. This tone is called "Dual Tone Multiple-Frequency" (DTMF) tone. The robot perceives this DTMF tone with the help of the phone stacked on the robot. The received tone is processed by the microcontroller with the help of DTMF decoder L293d IC the decoder decodes the DTMF tone is to its equivalent binary digit and this binary number is send to the microcontroller, the microcontroller is pre programmed to take decision for any give input and output its decision to motor drivers in order to drive the motors for forward or backward motion or a turn.DTMF stands for dual tone multiple frequency based on this, the robot movements are controlled. In this work use two small dc motors one for the back wheel and the other for the front wheel based on h-bridge concept, the mobile device is interfaced with the intellectual device called micro controller this micro controller controls the movements of the robot by decoding the tones received from the DTMF, and performs the pre defined tasks appropriate for that condition.The major components of this project are the DTMF control drives, 89C52 micro controller, and GSM modem with mobile, mechanical robot system operated at continuous regulated linear mode supply. Conventional radio frequency robot control techniques had disadvantages like, limited working range, and limited frequency and bandwidth ranges, and with less operational control.In this article using mobile phone for robotic control had wide working ranges with high control, less interference with intense accessibility. These DTMF mechanical systems find applications in military security actions like spy robot for bomb detection, in industrial security, controlling house hold appliances, for long distance remote sensing systems.The DTMF robot machine is controlled by the mobile signals, in which we make a call to the mobile phone which is inter connected to the DTMF robot operated at auto answer mode, based up on the instructions given by our cell phone the robot operation depends our mobile acts as an remote control for the robot.

1.1APPLICATIONS:

Scientific
Remote control vehicles have various scientific uses including hazardous environments, working in the deep ocean , and space exploration. The majority of the probes to the other planets in our solar system have been remote control vehicles, although some of the more recent ones were partially autonomous. The sophistication of these devices has fueled greater debate on the need for manned spaceflight and exploration.

Military and Law Enforcement
Military usage of remotely controlled military vehicles dates back to the first half of 20th century. Soviet Red Army used remotely controlled Teletanks during 1930s in the Winter War and early stage of World War II.

Search and Rescue
UAVs will likely play an increased role in search and rescue in the United States. This was demonstrated by the successful use of UAVs during the 2008 hurricanes that struck Louisiana and Texas.

Recreation and Hobby

See Radio-controlled model. Small scale remote control vehicles have long been popular among hobbyists. These remote controlled vehicles span a wide range in DTMF Controlled Robot 49 terms of price and sophistication. There are many types of radio controlled vehicles. These include on-road cars, off-road trucks, boats, airplanes, and even helicopters. The "robots" now popular in television shows such as Robot Wars, are a recent extension of this hobby.

1.2ADVANTAGES:

- Using DTMF wide range of control is possible. Wherever the mobile has network, the control of robot can be employed.
- The robot can work devoid of any software programming. So no complicated program structures are present.
- No microcontroller is present. So, it is comparatively cost efficient.
- Easy to implement.

II. LITRATURE SURVEY

[1]The authors Awab Faikh, Jovita Serao presented a paper titled“Cell phone operated robotic car”. In this paper the authors used IC89C51, DTMF, radio control, remote control vehicle and design the new method of construction of cell phone controlled robotic car. The RF circuit are used for limited distance so to overcome this problem authors uses the DTMF which will used for long distance. The main aim of this project is to control a robotic car using DTMF frequency. [2]In the year April 2014 the author amey kelkar presented a paper “Implementation of unmanned vehicle using GSM network with Arduino” In this paper author used robot, GSM, Arduino, DTMF decoder. In this paper they represented a vehicle development which is controlled by GSM and an Arduino is used for design of the vehicle. This system used DTMF frequency and it can be controlled over very long distance. The C & C++ language is used as programing language in this system

III. WORKING PRINCIPLE OF DTMF CONTROLLED ROBOT

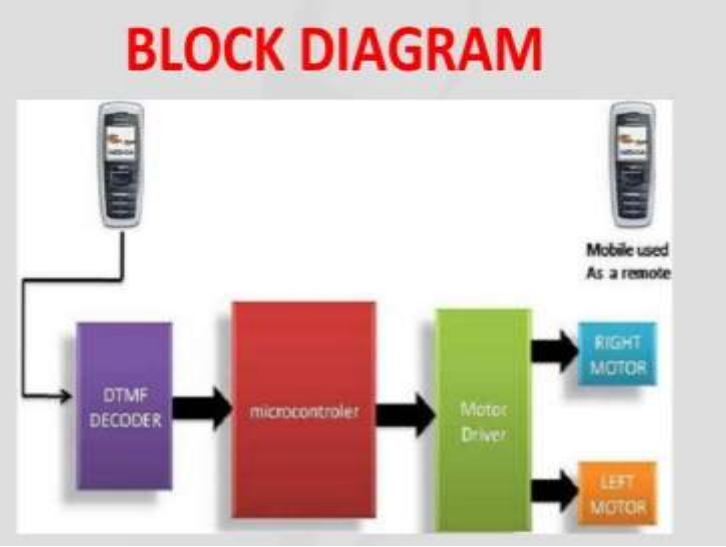

Fig 1: block diagram of working principle of DTMF Controlled Robot.

3.1HARDWARE REQUIREMENTS

- Mobile Phones
- DTMF decoder
- Motor driver IC
- DC Motor
- Power Supply

a. MICRO CONTROLLERAT 89S52:

AT 89S52 is a low power, high performance cmos 8 bit micro controller with 8K bytes of in system programmable Flash memory. The device is manufactured using Atmel's high density non volatile memory technology and is compatible with the industry standard 80C51 Instruction set and pin out.AT89S52 is a32K 8-bit microcontroller based on AVR architecture. ATS8952 is commonly used in many projects and autonomous systems where a simple, low-powered, low-cost micro-controller is needed. It has 14 digital input/output pins (out of which 6 can be exploited as PWM outputs), 6 analog input, 16 MHz crystal oscillator.

The high performance Atmel AVR RISC-based microcontroller combines 32KB ISP flash memory with read-while-write capabilities, 1KB EEPROM, 2KB SRAM, 23 general purpose I/O lines, 32 general purpose working registers, three flexible timer/counters with compare modes, internal and external interrupts, serial programmable USART, a byte-oriented 2-wire serial interface, SPI serial port, 6-channel 10-bit A/D converter (8-channels in TQFP and QFN/MLF packages), programmable watchdog timer with internal oscillator, and five software selectable power saving modes. The device operates between 1.8 to 5.5 volts.

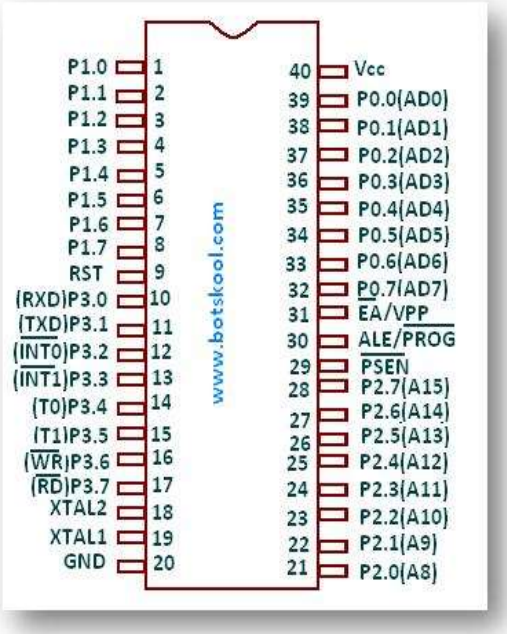

Fig.2:**Pin configuration of AT89S52**

b.MOTOR DRIVERL293D:

L293D is a typical Motor driver or Motor Driver IC which allows DC Motor to drive on either to drive on either direction. L293D is a 16 pin IC which can control a set of two DC Motors simultaneously in any direction. It means that you can control two DC Motor with a single L293D IC dual bridgeMotor Driver integrated circuit.

c.DTMF DECODER:

DTMF means Dual-Tone-Multi-Frequency. DTMF signaling is used for telecommunication signaling over analog telephone lines in the voice-frequency band between telephone handsets and other communication devices and the switching centre. The DTMF system generally uses eight different frequency signals transmitted in pairs to represent sixteen different numbers, symbols and letters. a DTMF signal is generate unique tone which consists of two different frequencies one each of higher frequency range (>1KHz) and lower frequency (<1KHz) range. The resultant tone is convolution of two frequencies . The frequencies and their corresponding frequency are shown in Table I.

Table1 : DTMF keypad frequencies

DTMF keypad frequencies (with sound clips)

	1209 Hz	1336 Hz	1477 Hz	1633 Hz
697 Hz	1	2	3	A
770 Hz	4	5	6	B
852 Hz	7	8	9	C
941 Hz	*	0	#	D

Each of these tones is composed of two pure sine waves of the low and high frequencies superimposedon each other. These two frequencies explicitly represent one of the digits on the telephone keypad. Thus generated signal can be expressed mathematically as follow

$$f(t) = A_H \sin(2\pi f_H t) + A_L \sin(2\pi f_L t) \quad (1)$$

Where:
A_H, A_L: are the amplitudes
f_H : high frequency range
f_L : low frequency range

Each key has a specific Tone frequency. For example if the "5" key is pressed then generated frequency tone is 770 + 1336 = 2106 Hz. The key "1" is pressed then frequency of 697 + 1209 = 1906 Hz which is shown in below figure.

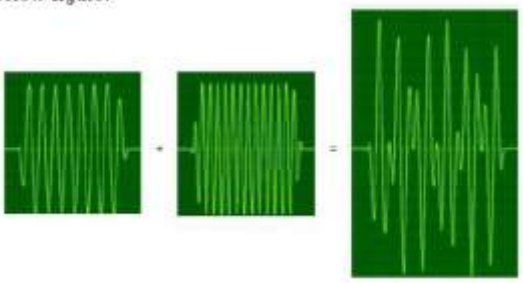

d.DC MOTOR DRIVER:

DC motor is electromechanical device that converts electrical energy into mechanical energy that can be used to do many works. It can produce mechanical movement to moving the wheels of the robot. DC motor has two wires, we can say them positive terminal and negative terminal, when these wires are connected with power supply the shaft rotates. We can reverse the direction of the rotation. L293d chip is very safe to use for DC motor control. This L293D is 16bit chip. Chip is design to control four DC motor, there are two inputs and two outputs for each motor.

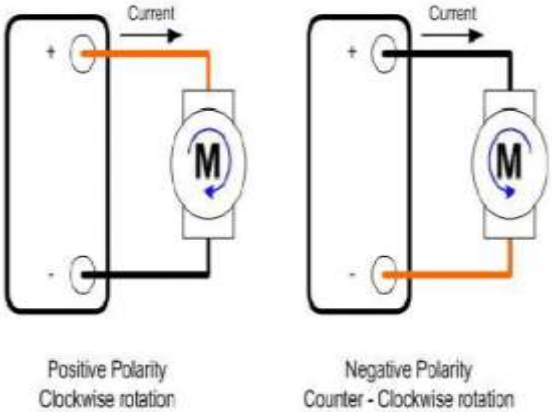

Fig 3: Working of DC motor

There are two Enable pins on l293d. Pin 1 and pin 9, for being able to drive the motor, the pin 1 and 9 need to be high. For driving the motor with left H-bridge we need to enable pin 1 to high. And for right H-Bridge we need to make the pin 9 to high.

If anyone of the either pin1 or pin9 goes low then the motor in the corresponding section will suspend working. Its like a switch.

1) L293D Pin Diagram:

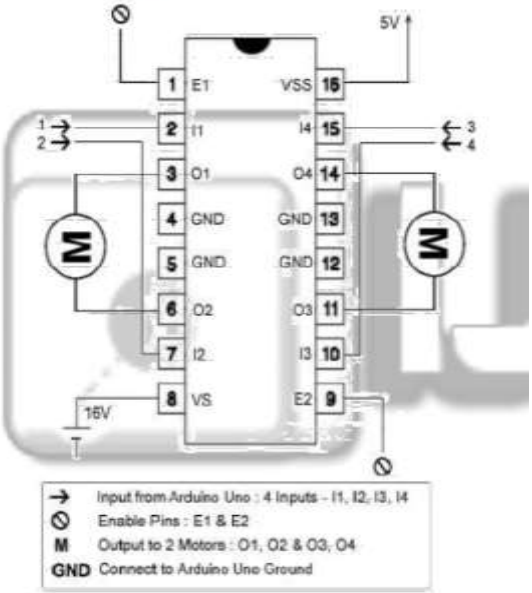

Fig.4:Working of L293D

The three 4 input pins for this L293D, pin 2,7 on the left and pin 15 ,10 on the right as shown on the pin diagram. Left input pins will regulate the rotation of motor connected across leftside and right input for motor on the right hand side. The motors are rotated on the basis of the inputs provided across the input pins as LOGIC 0 or LOGIC 1 the motor.

Let's consider a Motor connected on left side output pins (pin 3,6). For rotating the motor in clockwise direction the input pins has to be provided with Logic 1 and Logic 0.

Table 2: L293D Logic Table:

Pin 1 Enable	Pin 2	Pin 7	Function
HIGH	HIGH	LOW	Anticlockwise
HIGH	LOW	HIGH	Clockwise
HIGH	HIGH	HIGH	No Rotation
HIGH	LOW	LOW	No Rotation
LOW	X	X	No Rotation

Table 2: L293 Logic Table

Where X = HIGH/LOW

4.WORKING OF IMPLEMENTED SYSTEM:

Mobile phone which is connected to the robot is kept For the control of robot, we have to make a call to the mobile phone which is attached to the robot using earphone. thus two mobile phone are connected via mobile network. When the call is received then press the button in your mobile. DTMF tone is received by the mobile that is connected with the robot through headphone. These signals are received by the DTMF decoder that decodes the signal in binary sequence to the microcontroller. Sequences are given in table 1 Due to the programming in controller robot will move when pressing key in the mobile. –Microcontroller outputs are in binary form. The high output of the controller drives the motor driver to drive the motor in forward direction. Similarly we can move the motor in backward, left, right motion and stop condition. According to the source code given here key 2 is for forward, key 4 is for left rotation, key 6 is for right rotation, key 8 for reverse rotation in this robot navigation.

4.1OPERATION OF THE CIRCUIT:

The DTMF signal from the user (Sender) mobile phone is picked up by the system (Receiver) mobile phone. Then the connection is established between the two phones, whatever phone key is pressed at the Sender mobile phone, the corresponding DTMF tone is heard in the ear piece of the receiver phone. Received DTMF tone is fed to the DTMF decoder. The DTMF decoder will give the corresponding BCD value of the tone. This Output is connected to Q4, Q3, Q2, Q1 pin of MT8870 Decoder IC and this output is fed to AT89S52 Microcontroller pin 4,5,6,7 respectively. Based on the equivalent binary digit of the DTMF tone received by the Atmega328P Microcontroller, a decision is made for Pins 8,9,10 and 11 regarding which pins should be high or low. These pins are fed to the L293D IC as input. Based on the Controller decision, the Pins are either high or low which activates the motors and moves the vehicle.

5.PROPOSED METHOD

The operational flowchart of the system is shown in figure.

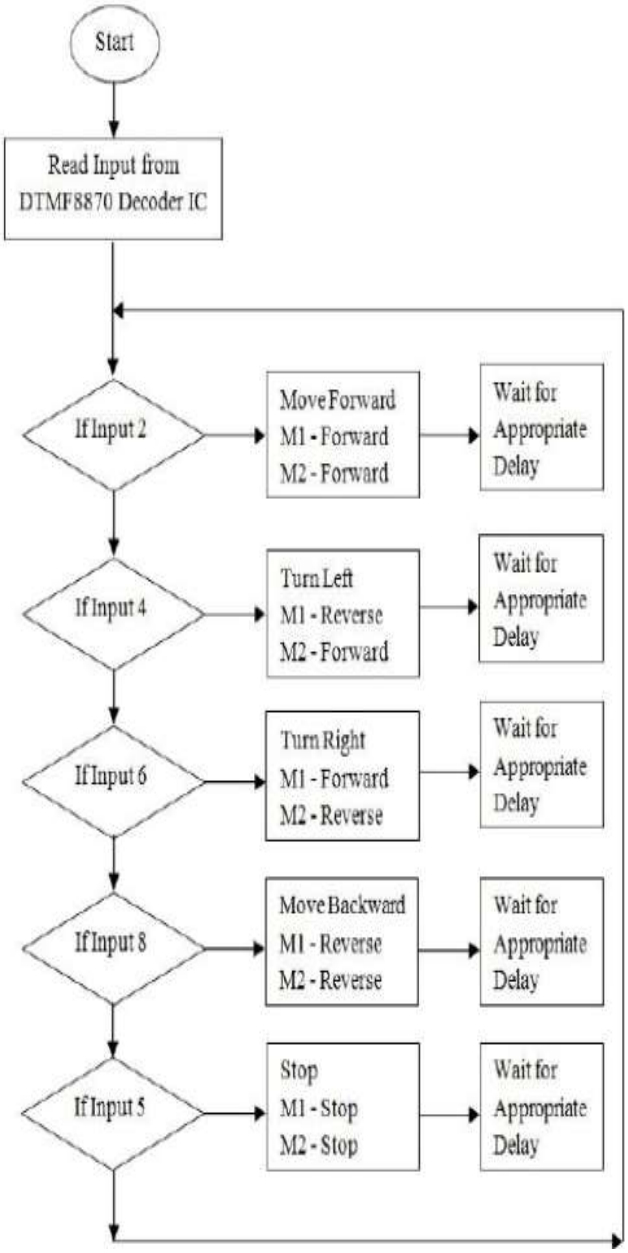

Fig5: Flow chart of system

5.1 CIRCUIT SIMULATION RESULT:

The Simulation of the circuit has been done on Proteus Professional v7.8 software package. The Simulation of the circuit is shown in figure . At89S52 Microcontroller has been used in simulation. Four DC Motor are connected to Port B (Pin 2,3,4,5) of Microcontroller through H-Bridge driver circuit.

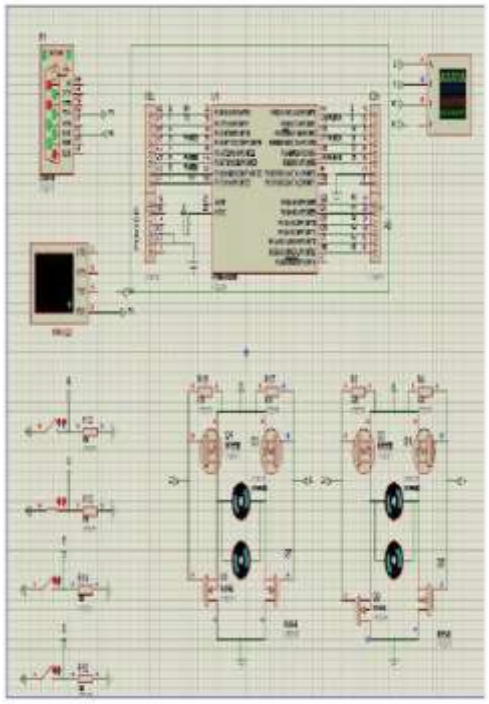

Fig 6 Circuit simulation in proteus simulator:

It is a **software** suite containing **schematic**, **simulation** as well as PCB designing.
ISIS is the **software** used to draw schematics and **simulate** the **circuits** in real time.
The **simulation** allows human access during run time,thus providing real time **simulation**.

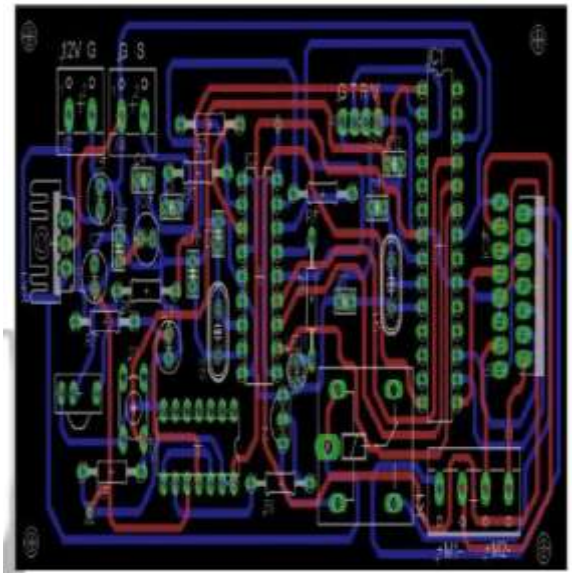

Fig 7: Printed circuit board for DTMF based mobile controlled robot

6. RESULTS:

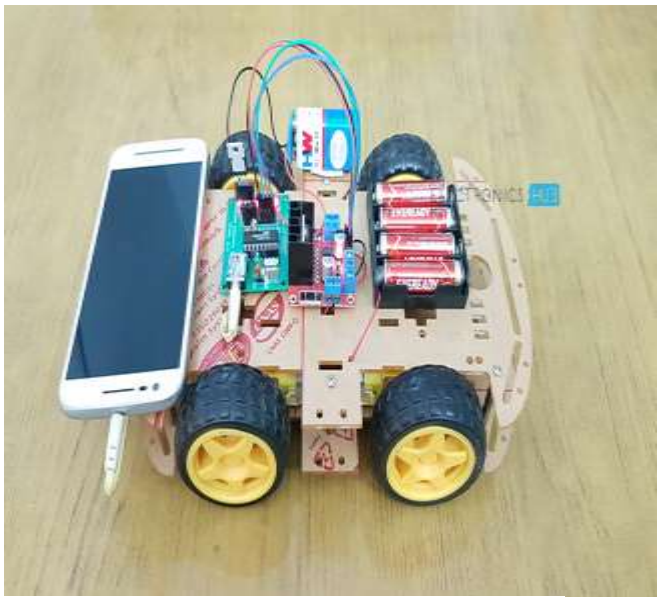

Fig 8:the Forward direction

Fig 8shows the Forwarddirection of the Robo when a key 2 is pressed from the mobile keypad the robot moves the forward direction.

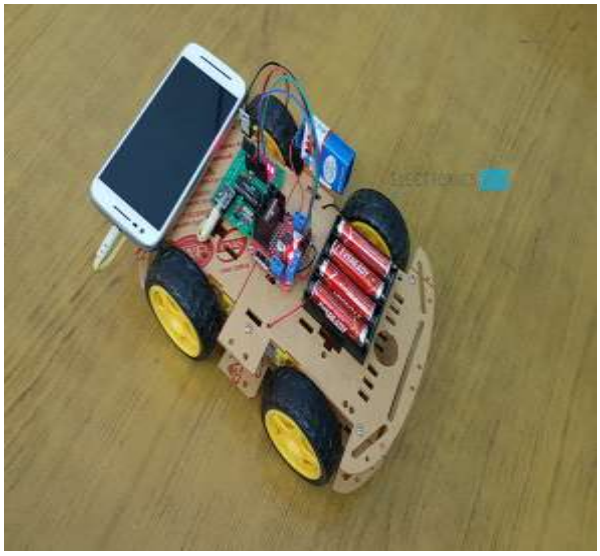

Fig 9:the Rightward direction

Fig 9 shows that the Rightward directionmovement of the Robo:when a key 6 is pressed
From the mobile keypad the robot moves the right Ward direction.

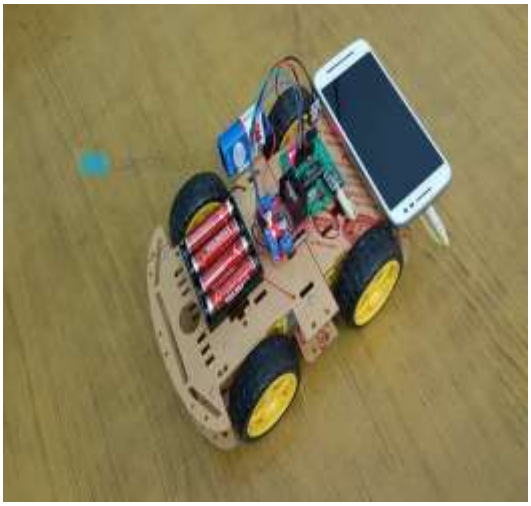

Fig 10:the Leftward direction

Fig 10 shows that the Leftward direction:when a key 4 is pressed from the mobile keypad the robot moves the leftward direction.

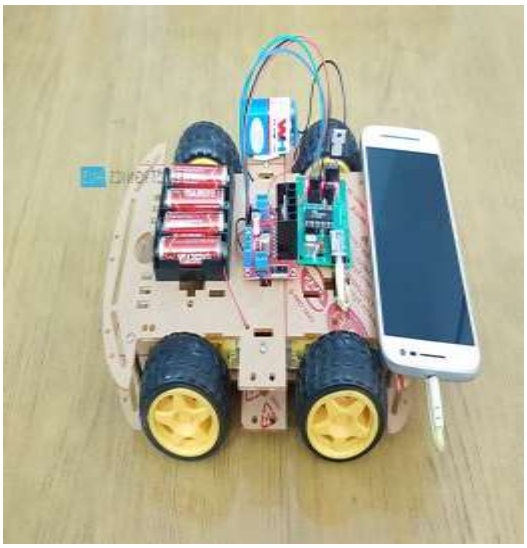

Fig 11: Backward Direction

Fig 11 shows that the Backward direction:when a key 8 is pressed from the mobile keypad the robot moves the backward direction.

7. CONCLUSION AND FUTURE SCOPE

Mobile controlled robot using DTMF technology has been set up. Advantage of wide range of control is possible even from a far away distance.DTMF robots can be used for wide applications

- Remote control vehicles like unmanned aerial vehicles in space exploration and military
- IR sensors can be added to detect obstacles
- Camera can be used to monitor surroundings
- Can be interfaced with micro-controller for automation.

8.REFERENCES

[1]. Yun Chan Cho and Jae Wook Jeon "Remote Robot control System based on DTMF of Mobile Phone", IEEE International Conference INDIN 2008,July,2008.

[2].http://www.dialabc.com/sound/dtmf.html

[3].http://www.robotplatform.com/howto/L293/motor_driver_1.html

[4].http://www.atmel.in/devices/ATMEGA328.aspx

[5].Ajay Deshmukhi ," Microcontrollers:Theory and Applications","Tata McGraw Hill publishing Com.Ltd,ISBN-0-07-058595-4.

[6].Raj kamal,"Micro controllers:Interfacing and System designing","Pearson Education India publishers,2009,ISBN8131706974,9788131706978

.[7].David E Simon, "An Embedded system softwares",AddisonWesleyProfessional,1999,ISBN -020161569X,9780201615698.

[8].Ajay Deshmukhi ," Microcontrollers:Theory and Applications", "Tata McGraw Hill publishing Com.Ltd ,ISBN-0-07-058595-4

ACKNOWLEDGEMENT:

We would like to express a special thanks of gratitude to our facultiy k.Vanisree mam Assoc.prof and my friend kaushal smsk who gave me the golden opportunity to do this wonderful project on the topic (Robotic vehicle based on DTMF), which is also helped us doing a lot of research and we came to know about so many things.