Journal of Engineering Sciences
Vol 11, Issue 7, July /2020
ISSN NO:0377-9254

GSM BASED WATER LEAKAGE CONTROLLER BY USING IoT

Vasanthakumar S[1], GnanaSundari E[2], MeenaNandhini M[3], Arunganesh.K[4]
Department of Electrical and Electronics Engineering, PeriyarManiammai Institute of Science and Technology, Periyar Nagar, Vallam, Thanjavur, Tamilnadu, India[1,2,3]

Assistant Professor, Depatment of Electrical and Electronics Engineering, PeriyarManiammai Institute of Science and Technology, Periyar Nagar, Vallam, Thanjavur, Tamilnadu, India[4]
vasanth.vk012@gmail.com

ABSTRACT:

Wastage and theft of water has become one of the major issues in India, a major source of wastage are leakage in the pipelines which are not noticed immediately. India contains over around 17 percent of the global population but only 4 percent of freshwater access and this will result in major water shortage in the country, whose effects will be compounded by climate change in the future. Internet of Things is the idea of connecting remote devices together using the internet. This project aims to reduce water theft and leakage by using a system consisting of flow sensors, solenoid valves and GSM module connected to a Raspberry pi board which sends the data to the server which displays the results on a dashboard resulting in the real time monitoring of the flow rate of water on both ends of the pipe. It uses the solenoid valve to immediately shut off the water supply if there is a difference in the flow rate between the ends of the pipe and alerts the authority with a SMS using the

GSM module with the last recorded flow rates and the location of the system.

KEYWORDS: Water shortage, GSM module, Flow sensors, solenoid valve, Raspberry pi board.

I. INTRODUCTION

This paper consists of water being delivered from the reservoirs to their destinations using a vast network of pipelines. This network is spread across the nation and it is not feasible to monitor the entire network constantly with the current technology. A large part of this wastage can be attributed to the issue of leakage in pipes (on the faucet end or along the joints). Every year we hear reports of pipeline bursts within cities and villages, these bursts occur at random times and at random locations and many a times the water flowing through these pipes get wasted to the drain as there are

no ways to immediately restrict the flow of water through these damaged pipes. Another issue of unmonitored water flow is water theft wherein someone may acquire an illegal water connection by modifying a section of the pipeline network to allow a source from the main line to their places/residences causing the legal consumer of the line to end up paying extra for water usage that they themselves haven't used/consumed. The current methods in use to deal with such problems, although effective, are time consuming and delayed. As a result, even though, the issue is taken care of eventually, the wastage still occurs. A feasible solution to this problem could be the provision of real-time monitoring along with an automated flow shutdown system, wherein an official can monitor water flow of the entire pipeline network in real-time and take necessary steps to prevent said wastage and theft, the automated system can help instantly restrict water flow so that wastage can be reduced. This Paper introduces a Leak Detection System which forms a GSM network of systems to monitor water flow in real time and can provide a timely alert with the location in case of any irregularities or issues and automatically restricts the flow of water through that particular location until the issue is resolved. These alerts are then sent to the next node on the network as well as to a central server which keeps a log of such activities and displays it onto an online dashboard containing a map of the network. This system will use the existing Global System for Mobile Communication (GSM) for sending data to the Server and nodes.

II. PROPOSED SYSTEM AND ARCHITECTURE

The main purpose of our project is to identify the fault occurred in the metro water supply pipelines by using IoT. Microprocessor collects the data from the sensors and transfer the data through Wi-Fi Protocol the data sent can be accessed at the end user device(ex:Laptop, Desktop, Tablet, Mobile phone). All the components and the sensors are interfaced with microprocessor.

Power supply is connected to microprocessor. All the components are operated by programming the microprocessor. Wireless technology transfer the data to the PC. The buzzer will indicates the water leakage in the pipeline by giving sound. The solenoid valve is also connected on the pipeline, if any water leakage or water flow is detected the solenoid valve act as a switching device and immediately shut down the water flow by closing the water tank. The

microprocessor is also interfaced with the GSM and the GPS module. The GPS module is used to find the location and exact coordinates position of the leakage of the water supply line. The GSM helps to receive and transfer the acquired data to the monitor.

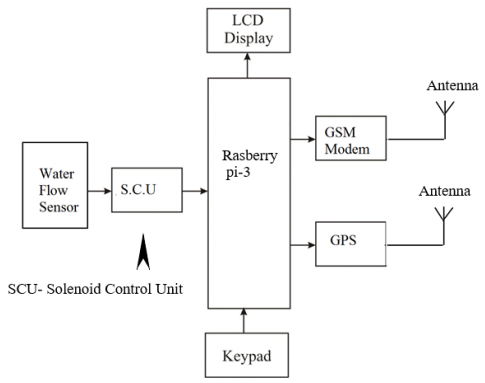

Figure 1: Proposed block diagram

A. Hardware Description

Raspberry PI:

Raspberry pi is a mechanically compatible system on modules. It consists of processor, memory, eMMC Flash and supporting power circuit.The raspberry pi is a both hardware and software slack with its 0wn design and structure .It also has a USB port in it.

LCD:

Liquid Crystal display is the material which have the properties of both the liquid and solid properties with a rather melting point. A liquid crystal material is sand witched between the two glass materials. The inner glass plates are coated with the transparent electrode which will display the characters and numbers. The Liquid crystal Display do not emits light. So in this case brightness is needed to view the values on the display unit.

Water flow sensor:

Water flow sensor is a type of sensor which is used to analyse the flow rate of the water and also used to find the pressure of water in the pipelines. The water flow sensor works on the principle of Hall Effect. There are different types of water flow sensor, the water flow sensors are like valves which are connected to the pipes. Which can be used in all the types of water such as the warm, cold, clean or dirty.

Solenoid valve:

Solenoid valve is a valve which is operated by the means of electromechanical method. It is classified based on the type of current it uses and also classified based on the generated magnetic field and the type of mechanism they used to regulate the fluid.

GPS:

Global Positioning System is the satellite system. Which is used to identify the location and the climatic condition of the location. It is also used to locate the exact coordinates of the particular location or

area. GPS is also used in the navigation of the planes, ships and cargoes.

GSM:

A GSM is the Global System for Mobile communication. It is a kit used worldwide to receive and transfer the data. GSM is an open and digital cellular technology. The GSM technology has the improved efficiency. It uses the (TDMA) Time Domain Multiple Access Technique.

B.Software Description

Raspberry pi-3:

The Raspberry Pi Compute Module 3+ (CM3+) is a range of DDR2-SODIMM-Raspberry pi is a mechanically compatible system on modules. On Modules (So MS) containing processor, memory, eMMC Flash and supporting power circuit.These modules allows a designer to construct the Raspberry Pi hardware and software stack in their own traditional systems and design expectations. In addition, these modules have extra IO interfaces over and above what is available on the Raspberry Pi model A/B boards, opening up more options for the designer[1].

The CM3+ contains a BCM2837B0 processor (as used on the Raspberry Pi 3B+), 1Gbyte LPDDR2 RAM and eMMCFlash. The CM3+ is currently available in 4 variants, CM3+/8GB, CM3+/16GB, CM3+/32GB and CM3+ Lite, which have 8, 16 and 32 Gigabytes of eMMC Flash, or no eMMC Flash, respectively. The CM3+ Lite product is the same as CM3+ except the eMMC Flash is not fitted, and the SD/eMMC interface pins are available for the user to connect their own SD/eMMC device[2].

III. EXPERIMENTAL RESULT AND ANALYSIS OF THE SYSTEM

Based on the block diagram the components are connected. The water flow sensors and the solenoid valves is connected on the water pipeline. The water flow sensor will identify the flow rate of the water. And the flow rate of the water. The sensors in the circuit will obtain the data and transfer it to the microprocessor. The connection shows that , the Vcc is connected to the +5 V, Tx of the GPS is connected to the 10th pin of the Raspberry pi board, The LCD board has pins such as D1, D2, D3, D4, D5, D6, D7. The D4 is connected to the 3rd pin of the microprocessor. D5 sis connected to the 5th pin, D6 is connected to the 7th pi. It hastwo flow sensors namely flow sensor 1 and flow sensors 2. It has mainly three parts such as VCC, GND and O/P pins. The Vccand GND of both the sensors are connected each other. The Vcc of the Flow

Sensor 1 is made to interface with the LCD display LCD LM016L. The GPS is also connected in the circuit the Tx of the GPS is connected to the 10th pin of the Raspberry pi board.The transformer T is also used in the power circuitry. The power circuit has the four diodes such as D1, D2, D3 and D4. The secondary end of the transformer is connected to the diode D1 and D4 (IN 4007). The two capacitor connected in parallel of $1000\mu F$ and $100\ \mu F$.

The power supply board will deliver the supply of +5V to the whole circuit. The flow rate F1 & F2 are displayed in the screen of the LCD. If any leakages found on the pipeline the solenoid valve will immediately shuts the water tank. The GPS module used to find the exact location of the pipeline. And the leakage in the pipeline will be easily rectified.

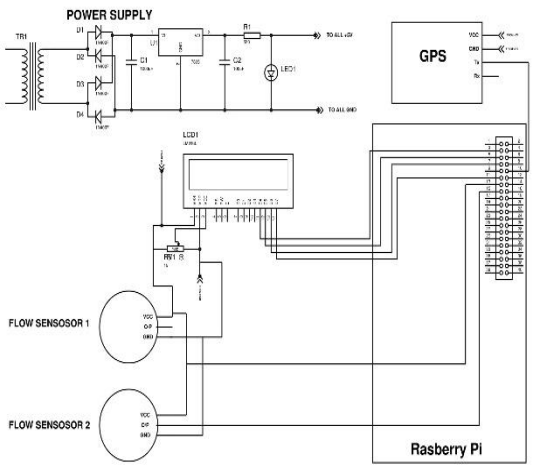

Figure 2: Proposed circuit diagram.

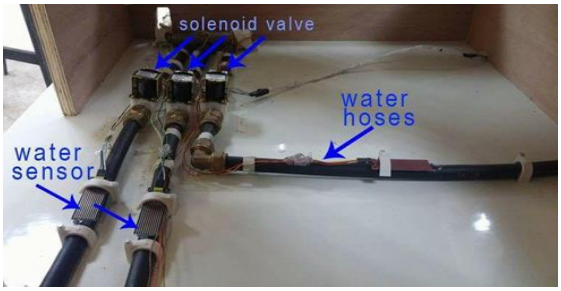

Figure 3 Hardware diagram.

IV. CONCLUSION

This water leakage detection can readily use to prevent the leakage in underground pipelines. To identify the leaks and rectify it by this system. This project aims at reducing leaks which has many benefits for both the corporation as well as the consumer including greater reliability through an efficient water system and also preserving water for future use.

V. REFERENCE

1. Ali M. sadeghion ,Nicole Meteje, David N. chapman Carl j. Anthony,“Smart Wireless Sensor Networks for Leak Detection in Water Pipelines”, Journal of Sensor and Actuator Networks in civil engineering and mechanical engineering,Vol:3 Feb 2014

2. Andrea cataldo ,Giuseppecannazza , egidio de benedetto and Nicola giaquinto, "A New Method for Detecting Leaks in

UndergroundWater Pipelines", IEEE Sensors journal, Vol. 12, no. 6, June 2012.

3. NandamBikramAdhikari, "Detection of Leak Holes in Underground Drinking Water Pipelines using Acoustic and Proximity Sensing Systems", Research journal of engineering sciences in electronics and computer engineering, Vol:3(9), 1-6, September- 2014.

4. Y.J. Cheng,W. Qiu,andJ.Lei, "Application of terrestrial laser scanning in tunnelinspection",Electron.J.Geotech,Eng.,Vol.21,no.12 2016.

5. Misiunas, D., Lambert, M., Simpson, A., Olsson, G. "Burst detection and location in water distribution networks," Water Science and Technology: Water Supply, 5(3–4), 71–80. (2005).

6. Tarapiah, S., Atalla, S., Hashim, K. F. B., &Daadoo, M. (2016). Mobile Network Planning Process Case Study-3G Network. Computer and Information Science, 9(3), 115.

7. Smith, L.A., Fields, K.A., Chen, A.S.C., and Tafuri, A.N., ìOptions for Leak and Break Detection and Repair of Drinking Water Systemsî, Battelle Press, 2000.[1], [2].