Journal of Engineering Sciences
Vol 11, Issue 11, NOV/2020
ISSN NO:0377-9254

Implementation of automated low cost Data warehouse for Preserving and Monitoring Vegetables and Fruits

Dr.R.C.Karpagalakshmi
Professor,
Department of Computer Science and Engineering,
Gnanamani College of Technology,
Namakkal, Tamil Nadu, India.
karpagalakshmirc@gmail.com

Mr. S. Bharathkumar,
Student,
Department of Computer Science and Engineering,
Gnanamani College of Technology,
Namakkal, Tamil Nadu, India.
er.bharathkumar1999@gmail.com

Mr. R. Vignesh,
Student,
Department of Computer Science and Engineering,
Gnanamani College of Technology,
Namakkal, Tamil Nadu, India.
vikitech112@gmail.com

Mr. M. Yogaraj,
Student,
Department of Computer Science and Engineering,
Gnanamani College of Technology,
Namakkal, Tamil Nadu, India.
yogamahi201620@gmail.com

Mr. A. Naveenkumar,
Student,
Department of Computer Science and Engineering,
Gnanamani College of Technology,
Namakkal, Tamil Nadu, India.
naveenarumugam143@gmail.com

Abstract: - Agriculture may be a crucial field during which any nation mainly concern. About 50 percent of the merchandise of the farmers has wasted due to the decay of organic materials and for the merchandise, they don't have market values. Our approach is to preserve and monitor that fruits and vegetables insecure manner and provide an online marketing environment for the patrons to buy for the merchandise directly from the farmers. Our goal is to conserve organic items and an online site that integrates materials recycling equipment with the web and saves low-cost stock details and provides a digital shopping channel for purchasers and bulk purchasers of those materials. Within the event of products being disposed of when processed or already decayed, it goes to the waste treatment unit where it's was fertilizers, thereby improving organic farming for farmers. From this scheme, farmers will never lose their yield products and even their costs. This increases the probability of exporting the products by retaining, storing and distributing them. It offers farmers 3 times the gap to sell their products. So it'll improve the income of the farmers and also improve the expansion of the village.

Index Terms—Preservation, Warehouse, Storage of vegetables and fruits, Marketing of farmer products, Management of stocks, Real time Monitoring.

I. INTRODUCTION

Agriculture is the backbone of our nation and it plays a major role in our country's Economy. India itself achieves the self-sufficiency in the area of farming. Even though due to the increasing in the population of the country, there is the urge to cultivate the organic products to cope up with the increasing population. Thus there is no more time to waste that valuable organic materials in the form of decay. Some reports shows that "About 50% of the agricultural products were got wasted in the year 2019 and mainly nearly 16% fruits and vegetables wasted annually consistently due to lack of preservation unit to preserve those products". Farmers are not having the comfortable facility to store and preserve their yielded vegetables and fruits at their own place. Due to this lagged facility their products gets wasted often and their income will be affected. Even though they are having the preservation facility provided by the government, the transportation cost is high since they are less in number. For example, only 136 preservation centers are present all across the Tamilnadu. This project will give the solution for their current issue on preserving the agriculture products. Considering the requirements of the perishable goods like climacteric fruits and vegetable storing warehouses this project propose a Warehouse Management System based on IoT which enables the user to monitor and control the storage conditions of fruits /vegetables all the time globally through the web page access. This webpage has also used to maintain the stocks of the preservation unit. This website is not only digitalize the entire record management but also provides a buying module. The buying module is proposed for general public who wants to buy the product from the farmers and also provides stockholders to buy the organic products massively. Even though preservation is effectively performed, the product will get wasted or decayed. The corresponding wasted or decayed products are shifted to waste management unit to produce manures that makes the farmers to use that manures on the fields which further increase productivity of the plants. The preservation unit consists of several processing units like dry, cold and waste management. The hardware and software components used in dry and cold units are almost same to both units. It includes sensors like temperature, humidity and smell sensors. As coming to the cold unit, the vegetables are preserved under the temperature -5 degree Celsius to +5 degree Celsius. So the unit consists of the freezer to maintain the optimal cold temperature along the cold unit. The another unit which is concerned is waste management unit. These waste management unit is used to process the decayed organic materials from the unit. And it can also used to process the vegetables which are already brought by the farmers as decayed state/ wasted organic materials. The main purpose of these unit is to convert the decayed/ wasted organic materials to manures.

These facilitates the improvement of organic farming thereby making the farmers not to depend too much on artificial manures that can lead to increased cost of buying artificial fertilizers and indirect effects like infertility of the soil. Thus thereby helps the farmers to decrease the amount of buying extra

fertilizers for the products. The stock management unit is also be implemented which is a website which can be used to maintain and manage the stocks which are present in the unit and which farmer has brought that product. The login's are provided for admin and farmers, so that the stocks can be viewed by the farmers and admin for effective management of stocks in the unit. Further the data in the stocks can be used to make sell the products. The separate website is to be created for customers who bought the organic products in the website, The customers can bought the products which are present in the units and contact the respective farmers for buying options. The major problem in every country is that farmers cannot decide price for their products. By these websites, the above problem can be solved because the price are decided by the farmers themselves. Thus it improves the income of the farmers to three times when compared to their normal income. Thus it provides increased scope of preserving, monitoring, managing and marketing the products effectively and efficiently.

II. LITERATURE SURVEY

This work deals with different sensors and sensor cloud that can be used to monitor the status of cold storages. Raspberry pi and hardware designs to connect with the internet. We have used messaging for notification purpose. [1].

This work deals with monitoring and controlling of food storages using Android app. we concluded that using Android app is more efficient when compared with Desktop application.[2]

This works deals with the implementation of IoT-OSMS, and ensured the occupational health and safety and improves working performance in cold storages. Fuzzy Logic and Real-Time positioning are integrated to achieve their goal. They used Bluetooth Low Energy (BLE), a kind of RFID solution to locate and collect accurate information of the workers who are working in cold storages. D. SulmanFarrukh, Muhammad Shahzad, Usman Khan, TalhaChughtai, and Ali Nawaz Khan (2013).[3]

They proposed an economic solution for cold storage management. Sensors are connected and at different levels as the temperature vary at different levels. This leads to the dumping of very accurate and reliable data from the sensors which in turn makes the whole system reliable and robust. E. Mira Trebar (2015)[4]

This work deals with the logistic management in cold storages where radio frequency identification (RFID) technology is used. Temperature has been monitored by using prototype UHF RFID data logger, semi passive RFID tag. This tag helps to log the sensor values using the respective time-stamp. The work also includes some features like data protection, automatic sensors signal acquisition, smart power supply. The data is stored using innovative analogue nanotechnology architectures. F. Zhao Xiaorong, Fan Honghui, Zhu Hongjin, Fu Zhongjun, Fu Hanyu (2015)[5]

In this paper, a novel IoT architecture based on object named service (ONS) which captures and stores the information in the web has been introduced. High volume products can be tracked using RFID tracks and low volume products can be tracked using bar codes. The data from the sensors, bar codes and RFID tags have been analyzed to obtain the shelf life and product quality. G. Yanan Li, YulinPeng, Lei Zhang, Jiefeng Wei, Dan Li (2015)[6] This work adopts wireless sensor network and research the performance and integrate mode of the technologies. It is designed to achieve a larger and longer communication distance transmission network. Easy access of product information is done which helps to enhance the product quality and safety.[7]

A food contamination can occur in the production process, but also a large part caused by the inefficient food handling because of inappropriate ambient conditions when the food is being transported and stored [14] Ki-hwan Eom, Chang Won Lee, Nghia Truong Van, Kyung Kwon Jung, Joo Woong Kim And Woo Seung Choi "Food Poisoning Prevention Monitoring

System Based On The Smart RFID Tag System" InInternational Journal Of Multimedia And Ubiquitous Engineering Vol.8, No.5 (2013), Pp.213-222.

There are many factors leading to food poisoning, typically changes in temperature and humidity are important factors. So the monitoring system capable of measuring temperature and humidity variability during transport and storage is of prime importance [15] Kong Xiangsheng, "Design And Implementation Of Food Monitoring System Based On Wsn", Xinxiang University, Xinxiang, China.

In this paper advanced technology to monitoring and controlling frame =work for facilating food monitoring for protection of the food.The solution analyzes temperature,moisture,light as these parameters affect nutritional values of food.Inthis solution heterogenous sensors for various domains are employeed for sensing condition of food[32]Amirta Srivastava,Ankita Gulati " itrack:Iot framework for smart food monitoring System",International journal of computer application,volume 148-N0.12,Aug,2016

The presented method is based on purifying the air by destroying them using three tools: air is passed through a chamber where they are generated electromagnetic waves in the microwave range, knowing that they are destroying microorganisms and is then exposed to ultraviolet light and last through a process of ozonization. In this work the command of the magnetron that generates microwaves and ozone generator are presented. The device has been designed to allow a control them more flexible that they can be tested as many dosages microwave, ozone or ultraviolet light so they can be experienced as many scenarios in order to obtain a storage times as long as possible and also power consumption reduction[33].Alin Grama, Ovidivu Pop, Adrian Tault, Lacrimioara,"Application of Microwave in Food Preservation", The 40th ISSE,2017

The growing interest in food quality and safety requires the development of sensitive and reliable methods of analysis as well as technology for freshness preservation and food quality. This review describes about food monitoring .The current development status of these technologies ,along with a discussion of the challenges and opportunities for future research,are discussed, [35] Fatima Mustafa,Silvana Andreesu,"Chemical and Biological Sensors for Food _Quality monitoring and smart Packaging",Foods 2018,168,MDPI

In this project we have designed and implemented Raspberry Pi which works as a sensor node for the fruit and vegetable storage

database using its IP address. Then a data fusion model is experimented which takes multiple sensed data as input and produces single fused information or action to be taken as the output. Thus aggregated several input as temperature, humidity and averages it to produce single consolidated output based on which the future decisions could be made. Finally this project is integrating the android mobile application which is used to facilitate user interaction and connect through IoT based system that is station/gateway and the internet. [36], S.A.Khumkar,A.S.Bhujbale,S.B.Khandar,S.P.Deshmukh,Dr.M .A.Pund, "IOT Based Monitoring and Control for Vegetables and Fruits Storage",Vol-4 Issue-2,2018,IJARIIE-ISSN(O)-2395-4396

The author discussed An intelligent IoT based Food quality Monitoring Approach to the evolution of multipurpose sensors over the latest decades has been investigated with developing devices with applications in several fields of technology. This system providing reliable information about the quality of packed products during their storage period. Variety of sensors temperature, humidity and storage period. This technology combined with IoT to integrated food monitoring. By using this approach we able to combine actuators and sensing devices also providing common operating picture to sharing the information over the platform which provides information about gas, temperature,humitity by using sensors. [37]. Alexandru Popa, Mihaela Hnatiuc,Mirel Paun,Oana Geman,D.Jude Hemanth,Daniel Dorcea,Simona Ghita,"An Intelligent IoT-Based Food Quality Monitoring Approach Using Low cost Sensors" ,Symmetry 2019,11,374

III. PROBLEM STATEMENT

In the above papers, the preservation of the organic materials usually demands large resources like capital and space and are not combined with any modern technologies like coolers, wave treatment. The way to increase the income of the farmers and the method to make decayed/Wasted products into waste management unit. Implementation of the above methods will be more beneficial for the farmers especially in the development of lifestyle and a way to increase the income. Thus this project helps by increasing the preservation of the organic materials at low cost and thereby can increase the probability of reselling the products and a way to marketing those products to customers and thus increase the income of the farmers. And monitoring of those products and online marketing environment will increase reliability.

IV. METHODOLOGY

A. *Methods of Preservation*

Fig 1.1, Fig 1.2 Dry unit processes and Cold unit processes with the MQ6 sensor, Load cell sensor, DH11 sensor which gives data about temperature, humidity to ardunio and it passes to the website over internet with the help of NodeMCU and displayed on the website where it monitored and exceeds particular threshold, automatically sends message to farmers. Further the Cold unit has cooling system for preservation where it can be maintained by coolers. Fig 1.3 Waste management unit processes with the ultrasonic sensor which gives data about waste levels to ardunio and it passes to the website over internet with the help of NodeMCU and displayed on the website where it monitored and exceeds particular threshold, automatically sends message to farmers and update product on web for commercial. With the help of these, manures level and wasted products to the farmers are send through sms to farmers and admin.

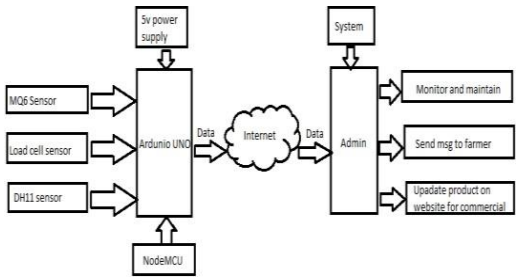

Fig.1 Dry unit process

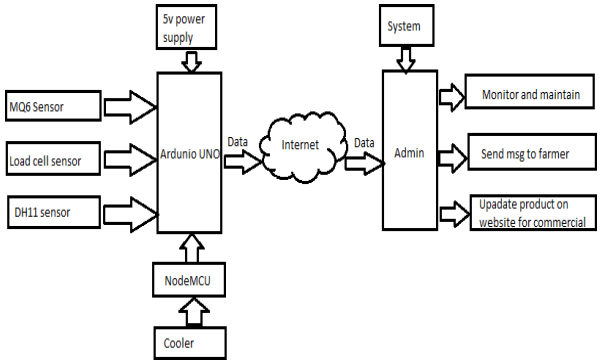

Fig.2 Cold unit process

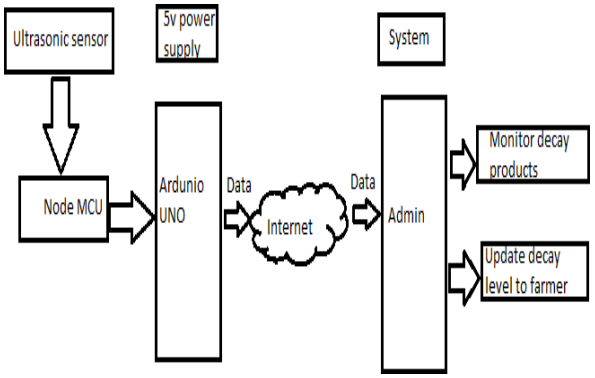

Fig.3 Waste management process

B. *Working*

The overall process start with the organic materials bought to the service center by the farmers. There the products classified into one of the following types, dry, cold and waste. The organic materials were checked against freshness and quality and stores at their respective units. The product given by the farmers are tagged with the stock ID and stored in the compartments of the units. Each unit is processed with the sensors for monitoring the conditions of the environment and freshness of the vegetables. The sensors are installed along suitable places along the compartments for effective monitoring of the environment and freshness of the vegetables. These sensors are

integrated with the Arduino where it acts as the controller of the sensors.

The DH11 sensor is used for monitoring temperature and monitor the humidity level of the unit, MQ6sensor is used for detecting the presence of the decay smells caused by gases like ammonia and methane, Ultrasonic sensor is used to detect the waste level at the waste management unit and weight sensor is used for getting the weight of the stocks brought from the farmers and also detects the weight of manures in waste management unit.. The power level at the sensors are extremely low and can be supplied by the battery or the separate connection to them. The data of these sensors are passed through the website using the node MCU and get integrated into the database where the website can take information for displaying to the admin. These data are checked against the respected thresholds and it goes up to the particular threshold, the notification will get to the admin and admin can check the units against the quality and decide whether the organic materials can remain in the unit or in waste unit.

This project associated with the website where it is constructed with the modules including stock management, monitoring of units and additional marketing module. The overall process is monitored, stored, and marketed through this website. It associates with the three persons, admin, farmer, and customers. The admin has associated with all the three modules. The process at software level occurs parallel with the above IoT process. The admin is responsible for including stock details in the website, creating account of the farmers and maintaining of the stocks.

Stock Management: As the farmers brought their products, the stock will be entered by the admin in the website in the suitable product category (as potato brought by the farmer, it is categorized into dry and apple, categorized into cold) along with the farmer id , date of entry, quantity and some other basic detail. For the registered farmers, username and password were provided and they can log on to this website to see and manage the products in the stocks. The products which were taken from the stock by the farmers from the unit are also entered by the admin so that the retrieval stock are also monitored. As the decayed items are used for preparing manure, the quantity of products that get wasted and transferred to waste management are also entered into stocks.

Monitoring: The data collected from the sensors by the Arduino is collected into the database of the website with the help of Node MCU. From the database, the temperature, humidity and waste level are taken and displayed in the website for monitoring. The data are checked with their threshold values continuously and this data values get exceed than the threshold, an alert will give to the admin and the admin will take action according to it. The waste levels at the waste management unit is monitored and when it get filled, the information will pass to the admin. Waste weight are also calculated continuously.

Online Marketing: Another important need of the farmers is to sell the products to the customers who bought the products. As the details of the quantity are available in the stock, that data serve as the quantity where customers who shop their products. The customer who want to buy that product will login after signup and bought products in their home and their price rates are decided by the farmers so the primary problems of the problem who decide the rates of their product is avoided. This helps the farmers to get satisfied because of the products were bought by their expecting price and thereby increase income of the individual farmers. Further the stockholders who bought product massively can visit the website and directly bought the products by contacting with the farmers directly. This reduces the work load of the farmers thereby saves time for reselling and marketing of the products.

C. Flow Chart

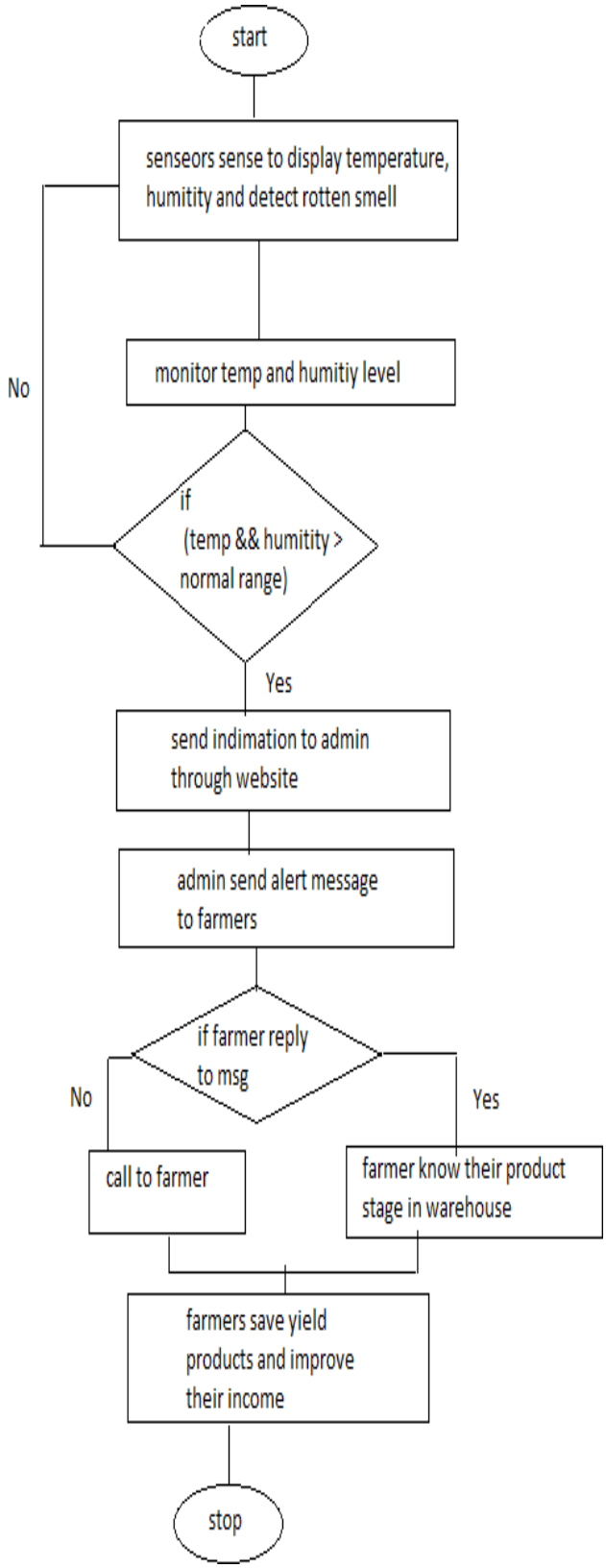

Fig.4.2 Flowchart of the proposed system

D. Table

The below table as a analyzed found over the internet.

Produce	Temperature (C)	Relative Humidity	Storage Life
Apples	32	90 – 95%	4 – 6 months
Beets	32	90%	1 – 3 months
Bressels Sprouts	32	90 – 95%	3 – 5 weeks
Cabbage	32	90 – 95%	3 – 4 months
Carrot	32	90 – 95%	4 – 6 months
Cauliflower	32	90 – 95%	2 – 4 weeks
Celeriac	32	90 – 95%	3 – 4 months
Chinese Cabbage	32	90 – 95%	1 – 2 months
Dry beans	32 – 50	65 – 70%	1 year
Garlic	32	65 – 70%	6 – 7 months
Horseradish	30 – 32	90 – 95%	10 – 12 months
Kale	32	90 – 95%	10 – 14 days
Kohlrabi	32	90 – 95%	2 – 4 weeks
Leeks	32	90 – 95%	1 – 3 months
Onios	32	65 – 70%	5 – 8 months
Parsnips	32	90 – 95%	2 – 6 months
Pears	32	90 – 95%	1 – 2 months
Sweet Pepper	45 – 50	90 – 95%	8 – 10 days
Potatoes	38 – 40	90%	5 – 8 months
Pumpkins	50 – 55	70 – 75%	2 – 3 months
Rutabaga	32	90 – 95%	2 – 4 months
Salsify	32	90 – 95%	2 – 4 months
Sweet Potato	55 – 60	85 – 90%	4 – 6 months
Tomatoes (Green)	55 – 60	85 – 90%	2 – 6 weeks
Turnips	32	90 – 95%	4 – 5 months

Table 4.1. Preservation range and yield

E. Hardware Implementation

- 4.C.1 Arduino Uno
- 4.C.2.DH11 sensor
- 4.C.3.MQ6 sensor
- 4.C.4 Load cell sensor
- 4.C.5. Ultrasonic Module HC-SR04

F. Software Implementation

- 5.D.1 XAMPP
- 5.D.2 Apache HTTP Server
- 5.D.3 MYSQL
- 5.D.4 PHP
- 5.D.5 PHPGRID
- 5.D.5 BOOTSTRAP

V. CONCLUSION

The main motive is to increase the income and lifestyle by preserving the organic products over long period by effective monitoring and maintaining , Marketing the products to general public and to convert the decayed or wasted products to manures and again use it on fields to increase productivity. Thereby it provides three times benefits to farmers by supporting them by increasing probability of resell, monitoring and management of the products in safe environment, and marketing the products to the general customer/stock holders who bought the products at the rates the farmer deciding. Thus it reduce time, money for preserving, transportation cost and increases income by reselling, manures and marketing.

VI. FUTURE ENCHANCEMENT

The preservation is the main scope of this project. So preservation capabilities can be increased in all manners. This can be effectively done by giving wave treatments to the organic products before it kept in the preservation unit. Each organic products has separate methodology for wave treatments. Wave treatment includes kept the organic products in the wave environment for particular time before it goes to preservation unit which helps to destabilize or remove the microorganisms which are present in it. Wave treatment includes ultrasonic waves, infrared, ultraviolet rays, micro waves etc.. Detailed analysis of report is made to analyze how these products react to different waves at what condition. The Sensors are kept at each rack individually in order to enhance the detectability of decay items by the sensors effectively. Further online transaction of amount can be included for the customers for fast buying the products from the farmers. These helps in digitalization in the fields of transferring of amounts through the banks automatically.

VII. REFERENCES

[1] Abel Avitesh Chandra & Seong Ro lee.(2014, June).Advanced Monitoring of Cold Chain using wireless sensor network and sensor cloud infrastructure. In International Electronic Conference on Sensors and Applications.

[2] Karleigh Huff “Active And Intelligent Packaging: Innovations For The Future” Graduate Student Department Of Food Science And Technology Virginia Polytechnic Institute And State University (Virginia Tech) Blacksburg. [3] Akyildiz, I. F., Su, W., Sankarasubramaniam, Y., & Cayirci, E. (2002). Wireless sensor networks: a survey. Computer networks, 38(4), 393-422.

[4] Badia-Melis, R., Garcia-Hierro, J., Ruiz-Garcia, L., Jiménez-Ariza, T., Villalba, J. I. R., & Barreiro, P. (2014).Assessing the dynamic behavior of WSN motes and RFID semi-passive tags for temperature monitoring. Computers and Electronics in Agriculture, 103, 11-16

[5] Chen, C., Chen, T. E., Zhang, C., & Xie, G. (2013, September).Research on Agricultural Products Cold-Chain Logistics of Mobile Services Application. In International Conference on Computer and Computing Technologies in Agriculture (pp. 247-254). Springer Berlin Heidelberg

[6] Yahia, E. M. (2005). Postharvest technology of food crops in the Near East and North Africa (NENA) region. Crops: Quality, Growth and Biotechnology. Dris R., Ed.; WFL Publisher, Helsinki, Finland, 643-664.

[7] Freitas, R., Soares, F., Vieira, V., & Machado, J. (2010, June).Monitoring and control of a cooling system in a commercial store. In Proc. of the World Congress on Engineering 2010, Vol. II WCE 2010.

[8] Ove Schimmer1, Frank Daschner2 And Reinhard Knöchel „Uwb-sensors In Food Quality Management – The Way From The Concept To Market” PROCEEDINGS OF THE 2008 IEEE INTERNATIONAL CONFERENCE ON ULTRA-WIDEBAND (ICUWB2008), VOL. 2

[9]Park, H. S., Jeong,M. S.,& Kim, B. S. (2001).Architecture of Web-based real-time monitoring systems

[10]Kim, W. R., Aung, M. M., Chang,Y. S., &Makatsoris, C. (2015). Freshness Gauge based cold storage management: A method for adjusting temperature and humidity levels for food quality. Food Control, 47, 510-519

[11] Likar, K., &Jevšnik, M. (2006).Cold chain maintaining in food trade. Food Control, 17(2), 108-113.

[12].Thai,T.T.;Yang,L.;DeJean,G.R.;Tentzeris,M.M.Nano technology enables wireless gassensing. IEEEMicrow. Mag. 2011, 12, 84–95. [CrossRef]

[13]. Kuswandi,B.;Wicaksono,Y.;Abdullah,A.;Heng,L.Y.;Ahmad,M .Smartpackaging: Sensorsformonitoring of food quality and safety. Sens. Instrum. Food Qual. Saf. 2011, 5, 137–146. [CrossRef]

[14] Ki-hwan Eom, Chang Won Lee, Nghia Truong Van, Kyung Kwon Jung, Joo Woong Kim And Woo Seung Choi "Food Poisoning Prevention Monitoring System Based On The Smart RFID Tag System" InInternational Journal Of Multimedia And Ubiquitous Engineering Vol.8, No.5 (2013), Pp.213-222.

[15] Kong Xiangsheng, "Design And Implementation Of Food Monitoring System Based On Wsn", Xinxiang University, Xinxiang, China.

[16] Ove Schimmer1, Frank Daschner2 And Reinhard Knöchel „Uwb-sensors In Food Quality Management – The Way From The Concept To Market" PROCEEDINGS OF THE 2008 IEEE INTERNATIONAL CONFERENCE ON ULTRA-WIDEBAND (ICUWB2008), VOL. 2

[17] MQ3."Air quality sensor MQ3 basics and interfacing diagrams".[online].Available:https://www.sparkfun.com/datasheets/Sensors/MQ-3.pdf.

[18] Food Safety Surveillance and Monitoring System in Korea Ki Hwan Park, PhD President, ILSI Korea Professor, Dep. of Food Sci. & Tech.,Chung-Ang University, Korea Presented under MFDS permission

[19]SensorWiki."Ultrasonic Sensor SR04".[online].Available:http://sensorwiki.org/doku.php/sensors/ultrasound

[20] M.KirthyReddy,M.Penchalaraju, "Pulsed electric field technology in food processing industry-a review", International Journal of Science and Research (IJSR), vol.3,no.7,2014,pp.1144-1149.

[21]. Ahmed N. 2013. Naturally occurring preservatives in food and their role in food preservation. International Journal of Pharmaceutical & Biological Archive, 4(1):22-30

[22]. Anand SP, Sati N. 2013. Artificial preservatives and their harmful effects: looking toward nature for safer alternatives. International Journal of Pharmaceutical Sciences and Research, 4(7):2496

[23].Lado BH, Yousef AE. 2002. Alternative food-preservation technologies: efficacy and mechanisms. Microbes and Infection, 4(4):433-440

[24].Leistner L. 1992. Food preservation by combined methods. Food Research International, 25(2): 151-158.

[25].Leistner L. 2000. Basic aspects of food preservation by hurdle technology. International Journal of Food Microbiology, 55(1):181-186.

[26].Rahman MS. 2007. Food Preservation: Overview: Handbook of food preservation. 2nd Edition, pp. 3-7, London, CRC Press.

[27].Sharif ZIM, Mustapha FA, Jai J, Yusof NM, Zaki NAM. 2017. Review on methods for preservation and natural preservatives for extending the food longevity. Chemical Engineering Research Bulletin, 19:145-153

[28].Jin-Gab Kim, Ahmed E. Yousef, Sandhya Dave, "Application of Ozone for Enhancing the Microbiological Safety and Quality of Foods: A Review ", Journal of Food Protection, Vol. 62, No. 9, 1999, pp. 1071-1087

[29]. [3] C. Okeke, A.E. Abioye, Y. Omosun, "Microwave Heating Applications in Food Processing", IOSR J. of Electrical and Electronics Engineering, Vol. 9, Issue 4, Ver. II (Jul-Aug 2014), 2014, pp. 29-34.

[30] F.P. Resurreccion Jr., D. Luan, J. Tang, F. Liu, Z. Tang, P.D. Pedrow, R. Cavalieri, "Effect of changes in microwave frequency on heating patterns of foods in a microwave assisted thermal sterilization system", Journal of Food Engineering, Vol. 150, 2015, pp. 99105.

[31].ImanMorsi, A Microcontroller Based on Multi Sensors Data Fusion and Artificial Intelligent Technique for Gas Identification, The 33rd IEEE Industrial Electronic Society(IECON), Taiwan, Nov.5, 2007

[32]Amirta Srivastava,Ankita Gulati " itrack:Iot framework for smart food monitoring System",International journal of computer application,volume 148-N0.12,Aug,2016

[33].Alin Grama, Ovidivu Pop, Adrian Tault, Lacrimioara,"Application of Microwave in Food Preservation", The 40th ISSE,2017

[34].Kirthika jayasankar,Karthika.B,Jayshree.T, Deepikalakshmi.R, Karthika.G," Fruit Freshness Detection using Raspberry PI" ,The Volume119, No. 15 ,2018, 1685-1691

[35] Fatima Mustafa,Silvana Andreesu,"Chemical and Biological Sensors for Food _Quality monitoring and smart Packaging",Foods 2018,168,MDPI

[36].S.A.Khumkar,A.S.Bhujbale,S.B.Khandar,S.P.Deshmukh, Dr.M.A.Pund, "IOT Based Monitoring and Control for Vegetables and Fruits Storage",Vol-4 Issue-2,2018,IJARIIE-ISSN(O)-2395-4396

[37].Alexandru Popa,Mihaela Hnatiuc,Mirel Paun,Oana Geman,D.Jude Hemanth,Daniel Dorcea,Simona Ghita,"An Intelligent IoT-Based Food Quality Monitoring Approach Using Low cost Sensors" ,Symmetry 2019,11,374