Journal of Engineering Sciences
Vol 11, Issue 3, MARCH /2020
ISSN NO:0377-9254

MONETIZATION OF COMA PATIENT AND HEALTH PREDICTION USING MACHINE LEARNING

V.V. Hari Babu[1], Ch.Subramanyam[2], Y.Chaitanya[3]

[1, 3] Department of Physics', Bapatla Engineering College (Autonomous),
Bapatla, Guntur (Dt), AP.

[2]Department of Chemistry, Bapatla Engineering College (Autonomous),
Guntur (Dt) Bapatla, AP.

Abstract:

In current days people are busy with their own lifestyles, people are having the unhealthy lifestyle because of their work, unhealthy food and other habits. This may cause of many diseases like heart attacks. For these reasons we need more software and apps to monitor and mobilize the health issues for users. By taking the advantage of machine learning concepts and advanced medical embedded components we can apply the prediction results in heart diseases. In other part it is very difficult to monitor the coma patients, because coma patients need continuous monetization by the medical staff which is very difficult and costly. So here in our system we are also proposing the Monetization of Coma Patient (MCP) using advanced medical embedded components and web technologies. For prediction of the heart attacks, we are using machine learning algorithms like Naïve Bayes and KNN algorithms. We found best results by comparing with the other ML algorithms.

Keywords: Naïve Bayes, KNN, Monetization of Coma Patient (MCP), and Heart attacks.

1. INTRODUCTION

As per research of World Health Organization of SEARO heart attacks are becoming a very common disease in all over world because of our lifestyles. Heart attack may cause to sudden death for people. That's the reason many MNC companies research on the prediction of the heart disease before attacks. Many gadgets came for analyzing our heart beat rate. But all these research not enough to handle the present situation. By taking the advantages of the Machine Learning we can train the existing patient records and predict the results. Machine Learning concepts almost become the software kind of applications. In our research we are integrating the ML concepts with advanced medical embedded sensors. By this way, we can achieve predictions in more real time way. Generally existing patient records has the several records like patient heart rate,

cholesterol level etc. But there is problem in analyzing the data like we can't analyze the huge records with different types of parameter ranges. For example as per human records cholesterol level is 100 to 400, and patient age can be 20 to 100. So probability of the analyzing the records will be more with multiple combinations of ranges. For this reason we need cluster data before analyzing the data. For clustering the data we are using K-Nearest Neighbor (KNN) analyzing rages of the data. After clustering the data we need classification algorithm which can get accuracy more by comparing other classification algorithms. Naïve bayes algorithm proved best classification algorithm by comparing with Support Vector Machine (SVM), Random Forest and Logistic Regression in many researches. Many weather prediction apps, spam filtering in mails are using Naïve bayes algorithm. So in our research we are taking the Naïve Bayes algorithm for classification of the existing patients data.

In other part we also find the main problem in medical related research. Coma is un-conscious state of human body, coma patients can't respond to the environment but they live. We need to track their body movements, heart rate etc. Monitoring the patients is very expensive due to experts need to monitor with different time intervals, that's very much problem for hospitals and patient guardians. We need to focus this part of research also. So in our paper we will research the IoT concept that we can monitor patient body movements and heart rate in our web application.

2. RELATED WORK

Bodart et al. survey on the coma practical consideration that behavior of the coma patients [1]. Bodart et al. proposed nosology of the diagnostic entities of the coma patient's behavior. In this reaserch they research on the brain behavior of the coma patients when patients eye open or close. They examine the reflex behavior of the brain when eyes not open, UWS (unresponsive wakefulness syndrome) reflex behavior of the patient when eyes open and MCS (minimally conscious state) Non reflex behavior when patent eyes opening. By monitoring brain scans they examine the coma patients. Ponikowski et al. survey on what all the causes to the heart attack. They found that half of the heart attacks cases happen under the below age of the 55. They found 5 major cases to cause of the heart attacks. They are heart muscle defects, high blood pressure, lung problems, life style and infections like rheumatic fever.

Nguyen et al. research on the prediction of the heart attack using IT2FLS algorithm [3]. Interval type-2 fuzzy logic system examines the train data by using c-mean clustering technique. In this research they use chaos firefly algorithm for attribute reduction in train data set. Later the train and tested data set using IT2FLS algorithm. They differentiate the results by comparing the attribute reduction and with all attributes. They got best results by the attribute reduction.

3. IMPLEMENTATION

Hardware requirement

Arduino Uno

Arduino is an 8 bit microcontroller with 14 digital and 6 analog pins. Arduino is brain of this project. Controller is interfaced with all the sensors and modules. Controller will be programmed in C or C++ language in Arduino IDE compiler.

Fig:-1 **Arduino Uno board**

Accelerometer

MPU6050 is a 3 axis accelerometer and gyroscope. This sensor will communicate with I2C protocol. Sensor will give 3 axis values by passing the register address. Fall detection can be found by using the X and Y angle which is converted value from 3 axis values. This sensor is used to sense the body movement of the coma patient. If any movement occurred an immediate notification is send to the regarding person.

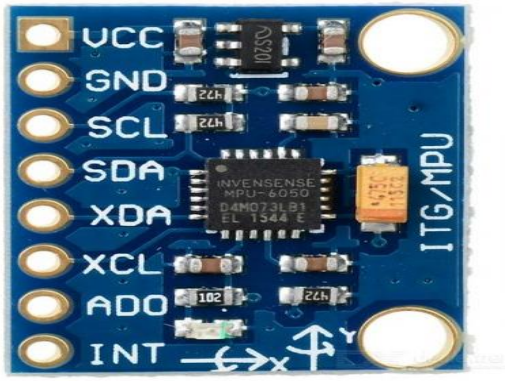

Fig:-2 **Accelerometer Sensor**

Flex Sensor

Flex sensor is a strip of two terminals. Flex sensor is used to find the movement of the hand which is placed on the patient hand. Sensor will give analog value which is fed to the analog pin of Arduino. If hand movement occurred SMS alert is send to the regarding person with the GSM module.

Fig:-3 Flex Sensor

DHT11

DHT11 is a single bus sensor used to read Humidity and Temperature. Sensor gives 40 pulses of which consists of 16 pulses represents

humidity and next 16 pulses represents temperature and last 8 pulses represents parity value. Temperature and humidity values are send to the cloud by using GSM Module

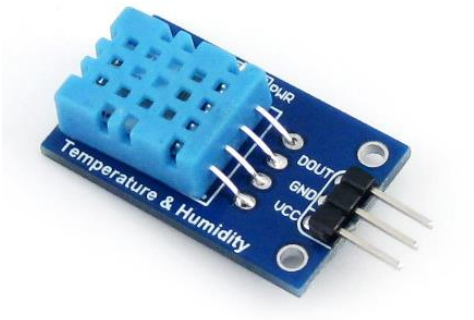

Fig:-4 DHT11 Sensor

Heart Beat Sensor

Monitoring heart rate is very important for athletes, patients as it determines the condition of the heart (just heart rate). There are many ways to measure heart rate and the most precise one is using an Electrocardiography. But the more easy way to monitor the heart rate is to use a Heartbeat Sensor. It comes in different shapes and sizes and allows an instant way to measure the heartbeat.

This sensor works on LM358 op-amp IC which is used as comparator. When pulse is present op-amp output produce high analog voltage and if no pulse is detected, output will have low analog voltage.

Heart beat values are taken by the controller and send to the cloud by GSM module for health monitoring.

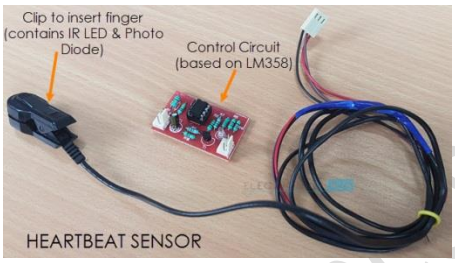

Fig:-5 Heart Beat Sensor

Keypad

4*3 keypad is used in this project. From the keypad, user gives the age of the person. This value is to find the health of the person. Given age value is sent to the cloud.

Fig:-6 Keypad

Slide Switch

Slide switch is used to select the gender (i.e., Male/Female) and Smoker or not (i.e., Yes/No). These values are send to the cloud for health monitoring.

Fig:-7 Slide Switch

Eye Ball:

IR Sensor is used to find the eye ball movement of th of the patient. If any movement occurred, an SMS alert will be sent to the regarding person.

Fig:-8 Eye Ball Sensor

GSM Module

SIM800L is a 2G supported GSM module. GSM interact with the controller with serial communication. GSM can understand the AT comands. By using AT comands we can send SMS to a particular mobile number and by using the network GPRS, will send sensor values to the cloud.

Fig:-9 GMS Module

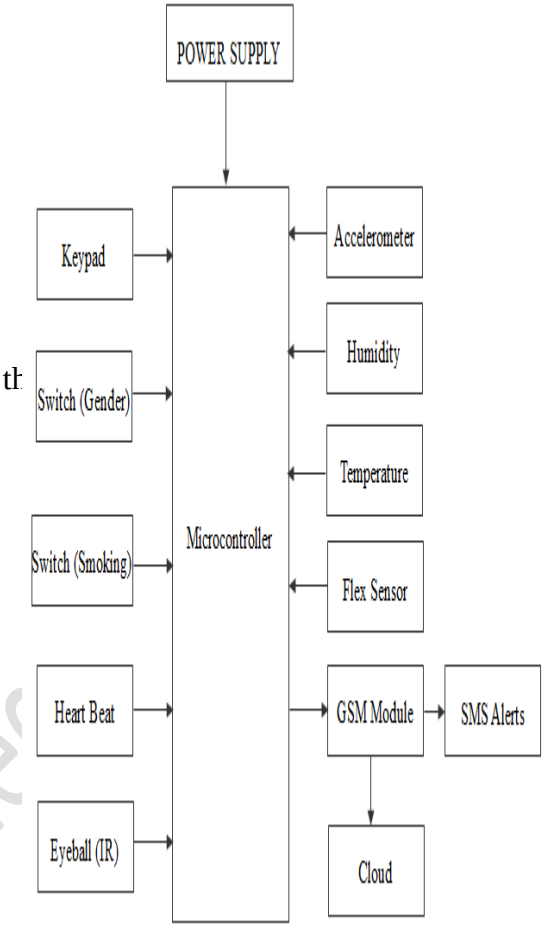

Fig:-10 VIT Hospitality System Block diagram

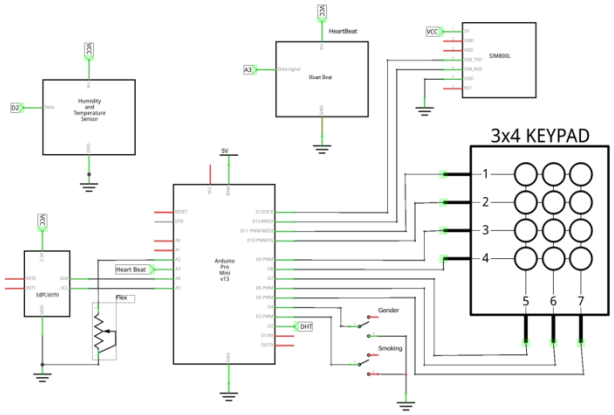

Fig:-11 Pin Connections:

- DHT11 is connected to the Digital pin D2
- MPU6050 is connected to analog pin A4 and

A5

- Flex sensor is connected to analog pin A2
- Heart beat sensor is connected to analog pin A3
- Gender switch is connected to digital pin D4
- Smoker switch is connected to digital pin D3
- Keypad is connected to digital pins of D5-D11
- GSM module is connected to digital pins of D12 and D13

4. WORKING PROCEDURE

- Select option for Health monitoring or coma patient monitoring
- For health option Patient parameters sensed by the sensor and modules
- In health, parameters we take from the user are age, gender, smoker and heart beat
- Age is taken from the keypad, gender and smoker is taken from the switch which is select to appropriate option (i.e., Male/Female and Yes/No) respectively.
- These values are sending to the cloud by using the GSM module.
- For Coma Monitoring option, Some parameters are read from the sensors and modules Like Heartbeat, Body Movement, Hand Movement, body Temperature and Humidity
- If heartbeat goes to any abnormal state that is below or above threshold value an SMS notification is sent to the regarding person
- Body or hand movement sensed by the sensors and if movement occurred, an immediate notification sent to the regarding person
- If Temperature reaches the threshold value SMS alert is sent from the GSM module
- These Values send to the cloud from GSM module for monitoring.

3.1. Dataset

For training the dataset we have taken the existing patient records with following attributes. We have listed the attribute and min-max ranges.

Age	1 to 100
Gender	Male or Female
Smoking	Yer or No
Heart Rate	40 to 100
Chest Pain	0 to 9
Cholesterol	100 to 400
Blood Pressure	60 to 160
Blood Sugar	80 to 300
Disease	Yes or No

Table:-1 Ranges of Attributes

3.2. K-Nearest Neighbors (KNN)

K-NN approach we are using for the clustering all the heart attack patient attribute records. We find the couple of the clusters that we can make cluster data for training the data. Algorithm works to form

k- clusters by the Euclidean distance formula

$$D_e = \sqrt{\sum_{i=1}^{n} (x_i - y_i)^2}$$

3.3. Naïve Bayes algorithm

Naïve Bayes algorithm is a popular prediction algorithm which is enhanced model of Bayes rule.

$$P(A|B) = \frac{P(B|A)P(A)}{P(B)}:$$

The updated Naïve Bayes formula,

For a data d and a class c, means P(c/d)

$$\boxed{P(c\,|\,d) = \frac{P(d\,|\,c)P(c)}{P(d)}}$$

5. RESULTS

	A	B	C	D	E	F	G	H	I	J
1	1	33	M	Y	45	6	200	65	80	Y
2	2	55	F	N	66	9	256	88	99	N
3	3	77	M	Y	87	5	222	142	151	N
4	4	55	M	Y	55	2	155	121	200	Y
5	5	66	M	Y	56	8	239	139	122	N
6	6	89	M	N	88	5	240	120	222	Y
7	7	78	M	Y	77	6	355	91	99	Y
8	8	98	F	Y	66	9	321	88	92	N
9	9	65	M	Y	55	1	144	140	88	Y
10	10	56	F	N	98	2	265	155	166	Y
11	11	63	M	Y	45	6	200	65	80	Y
12	12	67	F	N	66	9	256	88	99	N
13	13	67	M	Y	87	5	222	142	151	N
14	14	37	M	Y	55	2	155	121	200	Y
15	15	41	M	Y	56	8	239	139	122	N
16	16	56	M	N	88	5	240	120	222	Y
17	17	62	M	Y	77	6	355	91	99	Y
18	18	57	F	Y	66	9	321	88	92	N
19	19	63	M	Y	55	1	144	140	88	Y
20	20	53	F	N	98	2	265	155	166	Y
21	21	57	M	Y	45	6	200	65	80	Y
22	22	56	F	N	66	9	256	88	99	N
23	23	56	M	Y	87	5	222	142	151	N
24	24	44	M	Y	55	2	155	121	200	Y
25	25	52	M	Y	56	8	239	139	122	N
26	26	57	M	N	88	5	240	120	222	Y
27	27	48	M	Y	77	6	355	91	99	Y
28	28	54	F	Y	66	9	321	88	92	N
29	29	48	M	Y	55	1	144	140	88	Y
30	30	49	F	N	98	2	265	155	166	Y
31	31	64	M	Y	45	6	200	65	80	Y
32	32	58	F	N	66	9	256	88	99	N

Fig:- 12 heart attack Data set

Type	Set	Yes Score	No Score
Age	31-60	305.0	197.0
Gender	M	301.0	121.0
Smoker	Y	241.0	181.0
Heart Rate	40-60	143.0	88.0
ChestPain	4-6	181.0	61.0
Cholesterol	100-200	166.0	1.0
Bloodpressure	60-90	61.0	121.0
BloodSugar	80-150	181.0	181.0

p(yes)=(Yes_Score_of_age/Tot of Yes Score)*(Yes_Score_of_gen/Tot of Yes Score)*(Yes_Score_of_smoker/Tot of Yes Score)*(Yes_Score_of_hr/Tot of Yes Score)*(Yes_Score_of_cp/Tot of Yes Score)*(Yes_Score_of_ch/Tot of Yes Score)*(Yes_Score_of_bp/Tot of Yes Score)*(Yes_Score_of_bs/Tot of Yes Score)*(Yes Tot/Total)

p(yes)=0.002279956312542248 2

p(no)=(No_Score_of_age/Tot of No Score)*(No_Score_of_gen/Tot of No Score)*(No_Score_of_smoker/Tot of No Score)*(No_Score_of_hr/Tot of No Score)*(No_Score_of_cp/Tot of No Score)*(No_Score_of_ch/Tot of No Score)*(No_Score_of_bp/Tot of No Score)*(No_Score_of_bs/Tot of No Score)*(Tot No Score/Total) p(no)=1.846295066980864E-5

p(yes)+p(no)=0.002298419263212057

p(yes)/(p(yes)+p(no))=0.9919671093236458

p(no)/(p(yes)+p(no))=0.008032890676354033

RESULT: POSSITIVE

Fig:- 13 Result after applying KNN &Naïve Bayes algorithm on the dataset

Case-1:

Fig:- 14 Monetization of Coma Patient

Case-2:

Fig:- 15 Monetization of Coma Patient

4. Conclusion

In this paper we propose an IoT based application collaborate with Machine Learning concepts to monitor and mobilize the health issues for users. By taking the advantage of machine learning concepts and advanced medical embedded components, we can apply the prediction results in heart

diseases. We also proposed the Monetization of Coma Patient (MCP) using advanced medical embedded components and web technologies. We conducted several successful testing cases and got the expected results.

6. REFERENCES

[1] Bodart, Olivier & Laureys, Steven & Gosseries, Olivia. (2013). Coma and Disorders of Consciousness: Scientific Advances and Practical Considerations for Clinicians. Seminars in neurology. 33. 83-90. 10.1055/s-0033-1348965.

[2] Ponikowski, Piotr & Anker, Stefan & Khalid, Fawad & Cowie, Martin & Force, Thomas & Hu, Shengshou & Jaarsma, Tiny & Krum, Henry & Rastogi, Vishal & Rohde, Luis & Samal, Umesh & Shimokawa, Hiroaki & Siswanto, Bambang & Sliwa, Karen & Filippatos, Gerasimos. (2014). Heart failure: Preventing disease and death worldwide. ESC Heart Failure. 1. 10.1002/ehf2.12005.

[3] Nguyen CL, Phayung M, Herwig U. A highly accurate firefly based algorithm for heart disease prediction. J Exp Sys Appl 2015; 1-11

.