Journal of Engineering Sciences
Vol 11, Issue 3, MARCH /2020
ISSN NO:0377-9254

FUZZY BASED MODELLING OF DC MOTOR ACTUATOR FOR THE ROBOTIC GRIPPERS

G.NIRANJAN[1], M. HARILAL[2], B. SANDEEP[3], P. UDAY SHANKAR[4], R. SURESH BABU[5]

B. Tech student, Dept of EEE, JB INSTITUTE OF ENGINEERING AND TECHNOLOGY, Hyderabad, TS, India[1]

B. Tech student, Dept of EEE, JB INSTITUTE OF ENGINEERING AND TECHNOLOGY, Hyderabad, TS, India[2]

B. Tech student, Dept of EEE, JB INSTITUTE OF ENGINEERING AND TECHNOLOGY, Hyderabad, TS, India[3]

B. Tech student, Dept of EEE, JB INSTITUTE OF ENGINEERING AND TECHNOLOGY, Hyderabad, TS, India[4]

Associate Professor, Dept of EEE, JB INSTITUTE OF ENGINEERING AND TECHNOLOGY, Hyderabad, TS, India[5]

ABSTRACT:

Robot technology has visible traits to aid both the wishes of enterprise and human existence. This paper affords a brief review at the modelling and simulation of robotic grippers. The design of two fingered electric gripper, actuated with the aid of a right away modern motor, is defined for pick out and place of spark plug. Mathematical modelling of the motor is carried out to recognize and relate the manage parameters. Angular speed and torque reaction of the motor for a step enter are proven by using simulation. Controlling the direct current motor with pulse width modulation approach offers gentle variation of speed and relatively more torque. Further, it outcomes in brief response of motor torque. We are develop with extension with help of FUZZY controller for high efficiency and high accuracy purpose.

Keywords: FUZZY, motor, High efficiency, Torque, speed.

1. INTRODUCTION

Robots are normally considered to have interaction with the surroundings the usage of an arm and a wrist. In commercial norms the robotic hand is referred to as as a 'gripper', additionally referred to as quit-effectors. A robotic gripper is the bodily consciousness of an electromechanical system to perform physical dealing with responsibilities routinely and it's miles designed to match commercial application to normally draw close, bring and gather the additives. The exact function of gripper depends on its application. Grippers are categorised consistent with their actuating strategies like pneumatic, hydraulic and electrical. Nowadays, pneumatic grippers are used within the industry no matter their loss of gripping pressure manage, constrained gripper pressure, troubles because of air contamination, and many others. Problems involved within the manage and compliance of pneumatic systems have constrained their use in superior robotics [1]. Many techniques like bond graph method are in use, to enhance the manage and actuation of pneumatic grippers [2]. But nonetheless effective control of pneumatic device is not finished. Hence, options are to be located out for effective control of the gripping motion. This paper focuses mainly, at the modelling and simulation of DC motor used as the actuator of a select and place gripper.

Before almost enforcing any device its performance evaluation will become extraordinarily essential to keep away from in addition headaches. This can be performed by way of the use of appropriate simulation software program. MATLAB provides wide range of options to carry out mathematical simulation and improved consumer interaction. So that real version conduct beneath applied situations can be analyzed interactively. Simulation

of actuator performs an important role as we are able to determine the working limits to actuate the gripper. Several papers describe the technique for DC motor simulation. Sandesh and Nithya [3] analyzed the overall performance of DC motor in the MATLAB Simulink environment. They proposed a robot hand controlled via flex sensors in which DC cars were used to govern every finger independently.

OVER VIEW:

A two finger gripper is considered to be apt for spark plug pick and place application. Design parameters such as gripper force, linkage to actuator (DC motor) and friction at gripping area are considered for the gripper design. The gripping area on the finger is decided by the uniform grasping area available in the object, i.e., spark plug. A DC motor actuator suited to this application is chosen based on gripper force and torque requirements. The mathematical background of DC motor is studied in order to understand and relate the control parameters of the actuator and the gripper. A Simulink model of DC motor is developed and the model reliability is confirmed with a reference model using standard values of motor constants. The performance of DC motor actuator, for pick and place of spark plug, is then analysed by observing the torque and angular velocity response with time. A circuit diagram is developed in Simulink for PWM control of the DC motor actuator. The simulation results obtained with and without PWM control are compared.

2. RELATED STUDY

A lot of discussions are going to finalize the number of fingers in a gripper. The Harmon suggests that only three fingers were required to reproduce the most frequent and the common human grasps. Brown and Hazelton et al. found that the middle, ring, little finger provide the strength

needed for a firm grip. Although not a heavily loaded themselves, the thumb and index finger serve as retainers to make the grip undulate precisely. Chua suggested that in the fingertip pretensions, stability were usually achieved with the index finger and thumb. Literature suggests that the thumb, index and the middle finger will be providing sufficient dexterity during manipulation. The thumb and index finger will be ensuring a precise and stable grip, while the middle finger will be providing the necessary strength. The most studies of gripper design had proceeded under assumption that the frictional force will large enough to keep the object from sliding in the fingers, however, in practice; it are very difficult to ensure that the frictional forces between the fingertips and the object were sufficiently high to hold the object. The most of the grippers used now days were simply two-fingered gripper. However, two fingered configuration wouldn't ensure a safe grasp as the sideway slip can easily occur if any irregularities were present on the object's surface or the object are held in the way that the centre of gravity doesn't become collinear with the forces of applied by the gripper's fingers. Other grippers, which have more than two fingers, use the motors on each joint of the finger, which reduces the load holding capacity of the gripper due to self-weight of the motors. 1.4 Human Hand The human hands have always been a fascination for scientists. The studies of human hands have long been an area of interest for hand surgery, for the designing prosthetic devices and for quantifying the stretch of disability in individuals with congenital defects or wounded. The ideal end-effectors for such an artificial arm would be able to use the tools and objects that a person uses when working in the same environment. The human hands are a very complex grasping tool that can be handle objects of different sizes

and shapes. The many research activities has been carried out to develop artificial robot hands with a capability similar to the human hand, which remains as a highly complex structure that in many ways defy understanding.

3. PROPOSED SYSTEM

Grippers are designed with special characteristics according to application. For a spark plug pick and place application, the two finger scissor type of gripper has been designed with Solid Works software. A DC motor actuator is fixed to the input link of gripper by a peg. This converts the rotary motion of DC motor into the to and fro motion of the push rod of gripper which finally results in opening and closing of gripper fingers. The torque speed characteristics of DC motors and other features such as constant power output, rapid acceleration or deceleration, and adjustable speed control made them very useful for industrial applications. Figure, showing the typical torque speed characteristics of DC motors, indicates that the no-load speed and the stall torque are proportional to the load (voltage) applied across the motor. Thus, by varying the voltage across the motor, its torque is controlled. Pulse width modulation can be used to vary the voltage applied to the motor and it has been found to be a better approach to control DC motor. An important advantage of PWM circuits when controlling DC motors is that they maintain uniform torque over the entire speed range. When using a linear control (rheostat based), the DC motor jerks forward as it draws enough power to overcome inertia. But in PWM control, the pulses always contain the total circuit voltage and the pulse duration is only changes.

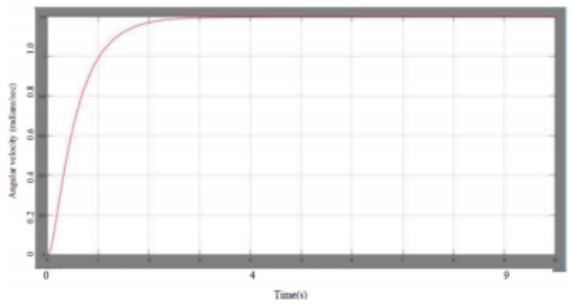

Fig.3.1. Angular velocity variation with time.

DC motor performance is next simulated for the proposed gripper requirements of 0.02 kg.m torque and 12 V input. Figures show the angular velocity and torque response for 12 V step input. It is seen that the angular velocity attains a steady value of 1.2 rad/sec in 2.5 seconds and maximum torque of 0.016 kg.m is obtained at less than 0.5 seconds.

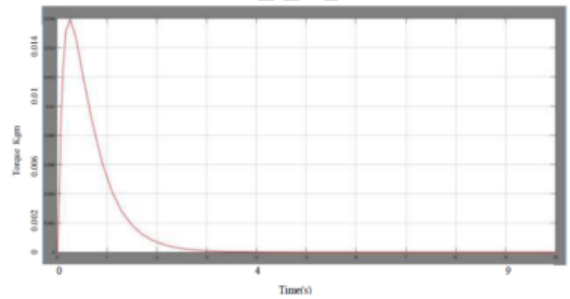

Fig.3.2. Torque variation with time.

Next, the performance of the DC motor is analysed for precise control of the gripper using a PWM controller. PWM controlled voltage with duty cycle of 50% and pulse duration of 12.2 ms is given to the H bridge device which is used to drive the motor. A current sensor is added in the circuit to analyze the current behaviour of DC motor. The speed characteristic of motor is obtained by using rotational motion sensor in MATLAB. Output of rotational motion sensor is given to the PS-Simulink block which converts the output into RPM.

EXTENSION:

Fuzzy logic is widely used in machine control. The term "fuzzy" refers to the fact that the logic involved can deal with concepts that cannot be expressed as the "true" or "false" but rather as "partially true". Although alternative approaches such as genetic algorithms and neural networks can perform just as well as fuzzy logic in many cases, fuzzy logic has the advantage that the solution to the

problem can be cast in terms that human operators can understand, so that their experience can be used in the design of the controller. This makes it easier to mechanize tasks that are already successfully performed by humans

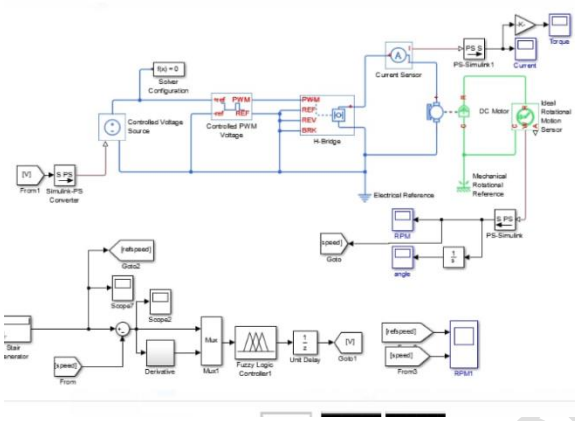

Fig.3.4.Fuzzy controller based circuit.

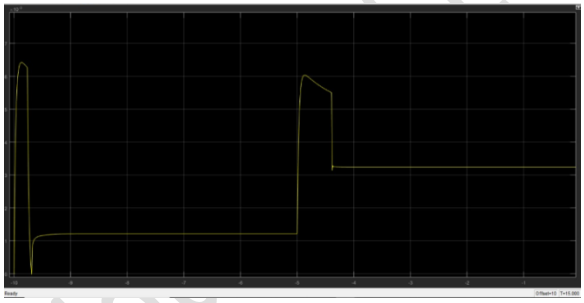

Fig.3.5. Angular velocity variation with time using FUZZY.

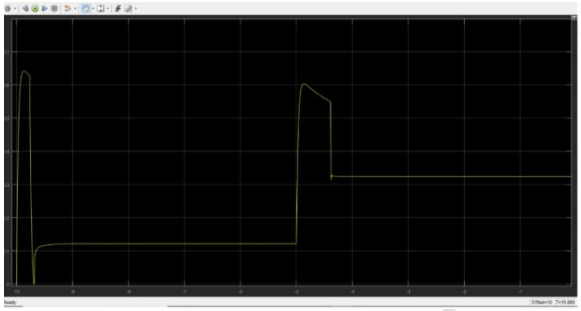

Fig.3.6. Torque variation with time.

4. CONCLUSION

The design and modelling of an electric gripper actuated by a DC motor has been described for spark plug pick and place application. MATLAB and Solid Works offer a simple means of simulation for such complex devices. Some concluding observations are noted as follows. The mathematical model of DC motor brings out the relation between the input/out parameters and the motor constants and helps in selecting the right motor for an application. The modelling of DC motor in MATLAB Simulink has been reviewed and its performance is analyzed for step input under applied condition. The torque and angular velocity response of the actuator are well into the expected

range of operation of electric gripper for pick and place of spark plug. PWM control of DC motor actuator produces a quick response of holding torque of gripper fingers. Better control of gripping action is obtained by varying the duty cycle of PWM controller.

REFERENCES

[1] Coe, S. and Waldron, K.J., "Mechanical Design of the DIGITS System," 1st National Applied Mechanisms and Robotics Conference, paper no. 89AMR- 8C-5, Nov. 1989.

[2] Jacobsen, S. C., Iverson, E. K., Knutti, D. F., Johnson, R. T., Biggers K. B., "Design of the Utah/M.I.T. Dextrous Hand", IEEE Transactions of Robotics and Automation", April 1986.

[3] Mason. M.P, Salisbury, J.K., "Robot Hands and the Mechanics of Manipulation". MIT Press, Cambridge, Massachusetts, 1985.

[4] Suhaib Md., Mukherjee S., Khan R.A., "Dexterous Rotation of Cube By Multifingered robotic hand", Proc. National Conference on TIME-2003,KITS Warangal, India, Aug 2003.

[5] Juvinall Robert C.,Marshek Kurt M.,"Fundamentals of machine component design",Wiley student edition,2007.

[6] Monkman Gareth J., Hesse Stefan,Steinmann Ralf, Schunk Henrik,"Robot grippers", Wiley-VCH Verlag GmbH and Co. KGaA,2007.

[7] S.Ramasamy and M.R.Arshad, "Robotic Hand Simulation with Kinematics and Dynamic Analysis", Intelligent Systems and Technologies for the New Millenium - TENCON 2000 Proceedings (IEEE), III178, Kuala Lumpur.

[8] Bicchi, A. (2000) hands for Dexterous Manipulation and Robust Grasping: A Difficult Road toward Simplicity. IEEE Transactions on Robotics and Automation 16 (6) 652-662.Piscataway, IEEE press.

[9] Toshio Morita, Hiroyasu Iwata and Shigeki Sugano(2000) "Human Symbiotic Robot Design based on Division and Unification of Functional Requirements", Proceedings of the 2000 IEEE International Conference on Robotics and Automation, pp.2229-2234.