Journal of Engineering Sciences
Vol11,Issue2,FEB/2020
ISSN NO:0377-9254

SMART BUS ALERT SYSTEM FOR EASY NAVIGATION OF BLIND USING RFID & ZIGBEE

[1]B.Moulika, [2]Mr.Y.Ravi Sankar, [3]Mr.K.Praveen, [4]Sri G.S. Surendra Babu
[1]M.Tech Student , [2,3]Assistant professor, [4]Associate Professor
Department of Electronics & Communication Engineering,
BHEEMA INSTITUTE OF TECHNOLOGY AND SCIENCE, ADONI

ABSTRACT

There are many techniques which are used for navigating the visually challenged people, navigation in real time traffic is the main problem. Objective of the project is to provide a solution with the aid of wireless sensor networks (WSNs). ZigBee system is used for indicating the presence of blind person in the bus station. Voice module and audio playback systems are used to update and inform the blind person about the bus arriving and reaching destinations and to guide him as to what he has to do next. Microcontroller analysis the information provided and generates the corresponding bus number. ZigBee transceiver sends the bus number and announced in the microphone attached with the system. Audio output is generated by the voice synthesizer. The expected outcome of the project is to obtain an easy navigation system for people with visually impaired.

INTRODUCTION

1.1.OBJECTIVE:

Society works essentially through the smooth trade of merchandise, administrations and brotherhood. Be that as it may, data and assets are made most promptly accessible to the eye. The societal framework and trade system are intended to streamline the opportunity, working, and delight in located individuals - confronting the visually impaired with rejection from this system. The world is loaded with risks and ponders which society accepts the utilization of vision to maintain a strategic distance from or appreciate. Being visually impaired limits their exposures to these marvels and expands their risk to the perils. More undermining than being cut off from business and societal trade is the contrary condition of general world awareness in regards to visually impaired individuals. Mainstream thinking has dependably fought that visual deficiency drives specifically to lack and insufficiency. Our point is to add to making their lives ordinary in the little way that we can. As indicated by the measurements and predicts of the WHO upgraded in 2014, 285 million individuals are assessed to be outwardly disabled around the world: 39 million are visually impaired and 246 have low vision. Each outwardly impeded individual countenances diverse difficulties taking into account their particular level of vision. With the ascent of different backing based associations, all the more outwardly disabled individuals have been given the chance to instruction and numerous different means. However the issues of route for the visually impaired are still exceptionally mind boggling and troublesome particularly when they strolled down in road furthermore explore to inaccessible spots by open transport framework. Blind people might be unwilling to move openly and easily or, out of anxiety, society limits development of the visually impaired person. Deliberate, self-coordinated development is viewed as one of the all the more difficult ranges confronted by visually impaired individuals.

While absence of sight is regularly remunerated by improving different faculties, social boundaries and systems of over insurance frequently hamper the perceptual advancement and improvement of useful development in visually impaired individuals. Guide puppies and strolling sticks take into consideration a free method for navigation, however they are restricted in new situations. RFID is doable and financially savvy however it is more appropriate for indoor correspondence as it were. Likewise it gives stand out

way correspondence and a short range of identification. For open air correspondence, all the blind people trust that the guide route offices can manage them like an ordinary individual, and ensure that they are constantly advantageous and safe out and about. The motivation behind this project is to reduce the troubles confronted by blind person when taking city transports, using interactive wireless communicationsystem.

1.2 MOTIVATION :

To use technology for the welfare of the society which includes visually challenged people. The project outcome is indirectly related to the ―Digital India‖ concept which is introduced by Govt. of India. Smart city concept is also in its development stage which aims to bring about change in public transportation system. Thus the project is present day concept and hence supports innovation of the current/existing system.

Consider the case of blind how he confronts the accompanying issues, when utilizing open transport. Trip arranging – finding a stop/station - finding a passageway to the station - exploring inside the station - finding the right stage and holding up spot - knowing when the right vehicle arrives - finding a vehicle passageway - installment - finding a seat - withdraw on right stop - exploring inside the station - findingthe way out of the station - finding the destination The vast majority of these assignments are paltry for the located, yet exceptionally troublesome for the outwardly debilitated. There are situations when a visually impaired individual has spent a few hours on the transport stop, since he couldn't perceive entry of the right vehicle. What's more, present framework has taking after disadvantages. ¬ Manual operation ¬ Monitoring relies upon driver ¬ Alertness of the system isless ¬ System is unsafe

1.3 EXISTING METHOD:

With expansion in movement and populace of the city areas the blind people confront a great deal of obstacles while venturing out starting with one point then onto the next. Because of this most of the blind people are compelled to stay inside and abandon their objectives and dreams as it might include driving from one spot to different spots and in this way costing them their profession/future. This anticipate archives the configuration and usage of a safe visuallyimpaired route framework for the blind people to help them in going from their present area to their craved destination.

1.4 PROPOSED SYSTEM:

To conquer the drawbacks of available accessible assistive gadgets, we propose a Wireless sensor system framework with ZigBee and RFID for blind identification in the bus station and installed framework for giving the bus information, lastly RFID for destination sign. Proposed system has following features.

- Safety concerns for blinds
- Automatic operation
- Continuously quick monitor

II. LITERATURE REVIEW

A ZigBee Based Patient Health Monitoring System", by K. Navya, Dr. M. B. R. Murthy. This paper, presents a Wireless Sensor Network (WSN) for monitoring patient's physiological conditions continuously using ZigBee .Here the physiological conditions of the patients are monitored by sensors and the output of these sensors is transmitted via ZigBee and the same has to be sent to the remote wireless monitor for acquiring the observed patient's physiological signal. The remote wireless monitor is constructed of ZigBee and Personal Computer (PC). The measured signal has to be sent to the PC, which can be data collection. Although Bluetooth is better than ZigBee for transmission rate, ZigBee has lower power consumption. The first procedure of the system is that the wireless sensors are used to measure Heart rate, temperature and fall monitoring from human body using ZigBee. Next procedure of the system is to measure saline level in bottle using ZigBee. The measured signal is sent to the PC via the RS-232 serial port communication interface. In particular, when measured signals cross the standard value, the personal computer will send a message to the caretaker's mobile phone.

III. **PROJECT DESCRIPTION**

This chapter deals with working and circuits of "**Smart Bus Alert System for Easy Navigation of**

Blind using RFID & Zigbee". It can be simply understood by its block diagram &circuit diagram.

BLOCK DIAGRAM:
BUS Section:
Transmitter

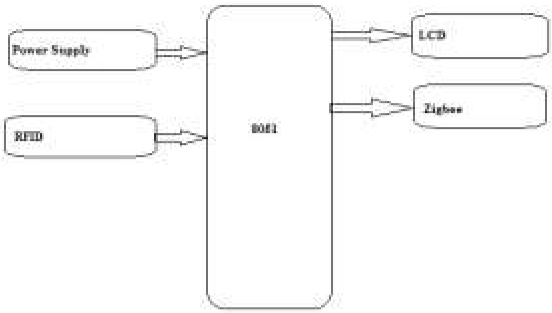

Fig 1: Transmitter

Blind People :
Receiver

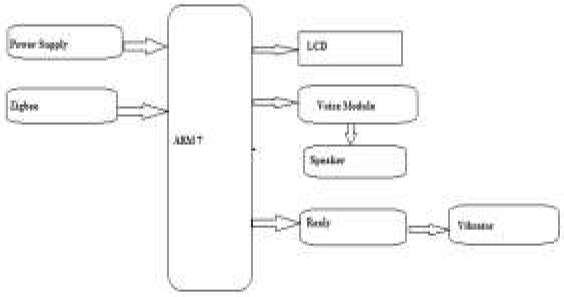

Fig .2 : Receiver

SOFTWARE REQUIREMENTS:

- Keil

HARDWARE REQUIREMENTS:

- Power supply
- LPC2148
- LCD
- APR9600
- Speaker
- vibrator

WORKING:

Stage 1: Acquisition of bus arrival information

The ZigBee in the blind module receives the signal which is transmitted by the ZigBee in the bus module within the 30 meters range. So that the blind person can easily get the information about bus arrival.

Stage 2: Intake of the destination to be travelled by the blind person

The blind person gives an audio input of the destination he wishes to reach to the system. **Stage 3:** Reception of information by the bus

The blind person gives the input about destination to the voice module V2 and voice module translates the voice of blind person to text and sends it to microcontroller.

Stage 4: Processing of bus information

Once the got signal changed over to text, it should be matched with the destination database present on the bus module so that the framework can illuminate the blind person if that bus is heading off to his wanted destination and in the event that he ought to take that specific bus or wait for the next one. Stage 5: Audio output for blind interaction Once the got signal has been decoded, the information is utilized to encourage the sound interface. A voice playback module is interfaced for redesigning the individual about different informations, for example, getting on and off the transport. In this anticipate GPS is utilized for the visually impaired individual to understand that his stop has arrived. At the point when the transport contacts the visually impaired individual's wanted destination he is again educatedby his module that he ought to get off the transport.

4.5 SCOPE OF THE PROPOSED SYSTEM

Blind can undoubtedly get the data about the transport to achieve destination, so travelling makes simple to him Can travel autonomous of any personsneed. User friendly interactions with the user. Easy to use Audio and vibration alert Voice based input for destination target .This is not limited to just visually impaired individual it likewise helps senior individual Communication is given between the visually impaired and driver if there should be an occurrence of any crisis.

SMART BUS ALERT SYSTEM FOR EASY NAVIGATION OF BLIND USING RFID AND ZIGBEE FLOW CHART:

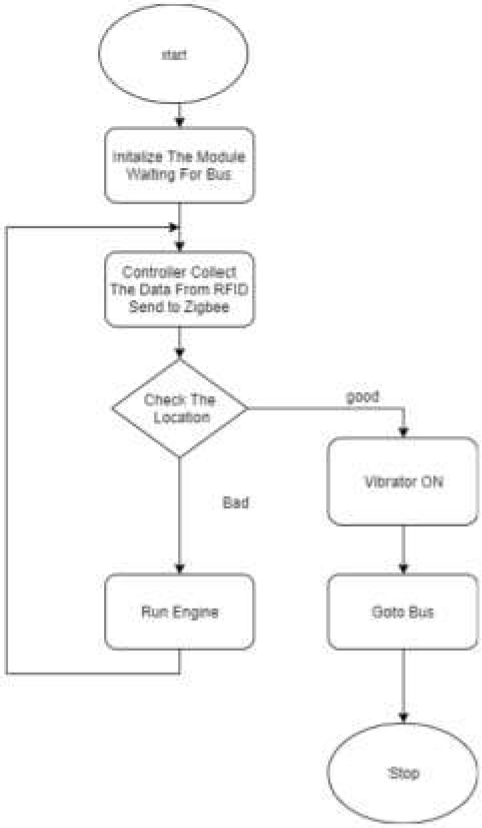

Fig .3: Flow Chart

IV. DESIGN OF HARDWARE

This chapter briefly explains about the hardware implementation of **Smart Bus Alert System for Easy Navigation of Blind using RFID & Zigbee**. It discusses the circuit diagram of each module in detail.

LPC2148 (ARM7) MICROCONTROLLER:

The LPC2148 microcontrollers are based on a 32 bit ARM7TDMI-S CPU with real time emulation and embedded trace support, that combines the microcontroller with embedded high speed flash memory of 512kB. For critical code size applications, the alternative 16-bit Thumb mode reduces the code by more than 30 % with minimal performance penalty.

Due to their tiny size and low power consumption, LPC2148 microcontrollers are ideal for the applications where miniaturization is a key requirement, such as access control and point-of-sale. A blend of serial communications interfaces ranging from a USB 2.0 Full Speed device, multiple UARTS, SPI, SSP to I2Cs and on-chip SRAM of 8 kB up to 40 kB, make these devices very well suited for communication gateways and protocol converters, soft modems, voice recognition and low end imaging, providing both large buffer size and high processing power. Various 32-bit timers, single or dual 10-bit ADC(s), 10-bit DAC, PWM channels and 45 fast GPIO lines with up to nine edge or level sensitive external interrupt pins make these microcontrollers particularly suitable for industrial control and medical systems.

BLOCK DIAGRAM OF LPC2148 MICROCONTROLLER:

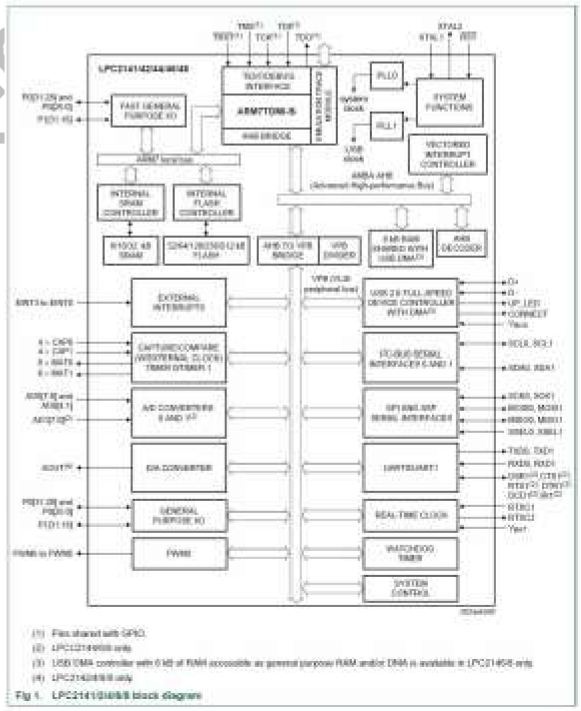

Fig 4 Block Diagram Of Lpc2148 Microcontroller

POWER SUPPLY:

The power supplies are designed to convert high voltage AC mains electricity to a suitable low voltage supply for electronic circuits and other devices. A power supply can by broken down into a series of blocks, each of which performs a particular function. A d.c power supply which

Journal of Engineering Sciences
Vol11,Issue2,FEB/2020
ISSN NO:0377-9254

maintains the output voltage constant irrespective of a.c mains fluctuations or load variations is known as "Regulated D.C Power Supply".

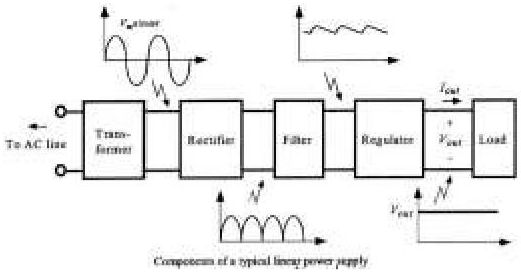

Fig 5.: Block Diagram Of Power Supply

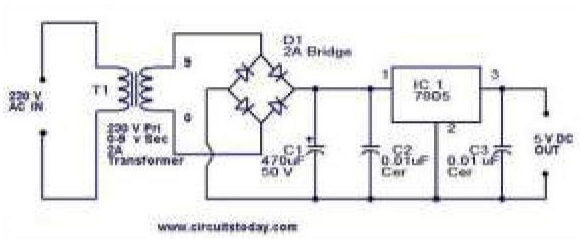

Fig:6. Schematic Diagram of Power Supply

LCD Screen:

LCD screen consists of two lines with 16 characters each. Each character consists of 5x7 dot matrix. Contrast on display depends on the power supply voltage and whether messages are displayed in one or two lines. For that reason, variable voltage 0-Vdd is applied on pin marked as Vee. Trimmer potentiometer is usually used for that purpose. Some versions of displays have built in backlight (blue or green diodes). When used during operating, a resistor for current limitation should be used (like with any LE diode).

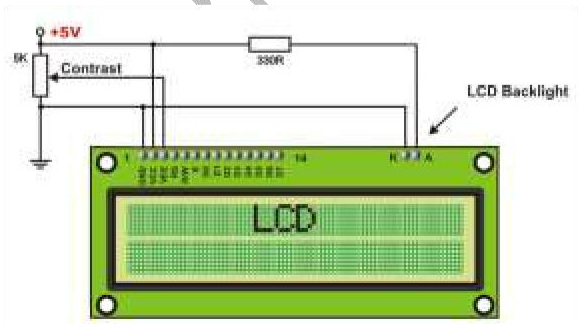

Fig 7: LCD Screen Circuit Diagram

RFID (Radio-frequency identification):

Radio-frequency identification (**RFID**) uses electromagnetic fields to automatically identify and track tags attached to objects. The tags contain electronically-stored information. Passive tags collect energy from a nearby RFID reader's interrogating radio waves. Active tags have a local power source (such as a battery) and may operate hundreds of meters from the RFID reader. Unlike a barcode, the tag need not be within the line of sight of the reader, so it may be embedded in the tracked object. RFID is one method of automatic identification and data capture (AIDC).

RFID tags are used in many industries. For example, an RFID tag attached to an automobile during production can be used to track its progress through the assembly line; RFID-tagged pharmaceuticals can be tracked through warehouses; and implanting RFID microchips in livestock and pets enables positive identification of animals.

Fig ;8.RFID

ZIGBEE:

ZigBee is an IEEE 802.15.4-based specification for a suite of high-level communication protocols used to create personal area networks with small, low-power digital radios.The technology defined by the ZigBee specification is intended to be simpler and less expensive than other wireless personal area networks (WPANs), such as Bluetooth or Wi-Fi.

This standard specifies operation in the unlicensed 2.4 GHz (worldwide), 915 MHz (Americas and Australia) and 868 MHz (Europe) ISM bands. Sixteen channels are allocated in the 2.4 GHz band, with each channel spaced 5 MHz apart, though using only 2 MHz of bandwidth. The radios use direct-sequence spread spectrum coding, which is managed by the digital stream into the modulator. Binary phase-shift

keying (BPSK) is used in the 868 and 915 MHz bands, and offset quadrature phase-shift keying (OQPSK) that transmits four bits per symbol is used in the 2.4 GHz band.

Its low power consumption limits transmission distances to 10–100 meters line-of-sight, depending on power output and environmental characteristics. Outdoors with line-of-sight, range may be up to 1500 m depending on power output and environmental characteristics.

ZigBee devices can transmit data over long distances by passing data through a mesh network of intermediate devices to reach more distant ones. ZigBee is typically used in low data rate applications that require long battery life and secure networking (ZigBee networks are secured by 128 bit symmetric encryption keys.) ZigBee has a defined rate of 250 kbit/s, best suited for intermittent data transmissions from a sensor or input device.

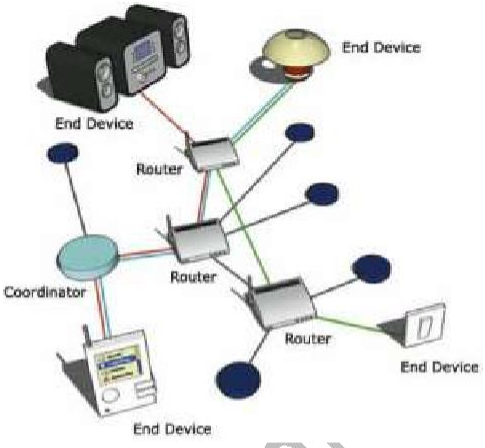

Fig 9: Zigbee Topology

V. EXPERIMENTAL RESULTS

The experimental setup is illustrated in below figures. Fig 7.1 and Fig 7.2 give a clear picture about the entire project we can understand the smart bus alert system for easy navigation of blind people using ARM7 and 8051 micro controller.

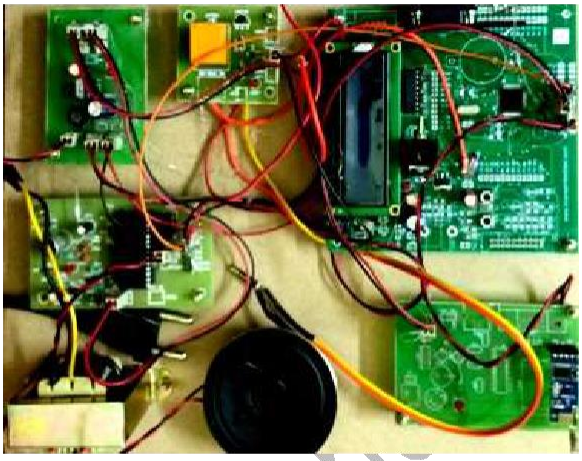

Fig :10.Blind Module

the following LCD is present in the bus model it will ask the bus to show the tag in which the bus number is present .

Fig:11. LCD At Bus Module

The Lcd in below Fig present in the blind module before showing the card this Lcd is empty.

Fig .12. LCD At Blind Moudle

After showing the bus number to the RF reader that is present in the bus module then the infomation from the bus module goes to blind module through the zigbee it will tells the bus location to the blind person

by a voice and also displays in the lcd as shown below Fig 13,Fig 14.

Fig 13: Displaying Location at the Blind Module

Fig 14: Displaying the Drop Location

ADVANTAGES

1. Easy to use
2. Blind can undoubtedly get the data about the transportto achieve destination,so travelling mmake easy to him
3. Tracking of bus system gets simpler
4. Effective,reliable and low-cost navigation system
5. Time management can be done
6. Useful for everyone.

FUTURE SCOPE

This system can further be improved by using GSM to provide communication between blind and his/her relatives in case of any emergency about more realistic location of his arrival and destination

CONCLUSION

With this proposed scheme, a visually impaired person can successfully travel from his location to his desired destination using a bus independently without any hassle.

REFERENCES

[1]. K. Navya, Dr. M. B. R. Murthy, "A Zigbee Based Patient Health Monitoring System", Int. Journal of Engineering Research and Applications Vol. 3, Issue 5, Sep-Oct 2013, pp.483-486

[2]. Matthew D'Souza, Montserrat Ros, Adam Postula, "Wireless Medical Information System Network forPatient ECG Monitoring" Digital System Design:Architectures, Methods and Tools, 2006, DSD 2006, 9th EUROMICRO Conference, 2006, pp.617-624.

[3]. C.C.Gavimath, Krishnamurthy Bhat, C.L. Chayalakshmi , R. S. Hooli and B.E.Ravishankera,"Designand Development of versatile saline flow rate measuring system and GSM based remote monitoring device", International Journal of Pharmaceutical Applications ISSN 0976-2639. Vol 3, Issue 1,2012, pp 277-281.

[4]. NakulPadhyeandPreetJain, "Implementation of ARM Embedded Web Server for DAS using Raspberry pi", VSRD IJEECE April 2013.

[5]. Ch. Sandeep Kumar Subudhi and S. Sivanandam, "Intelligent Wireless Patient Monitoring and Tracking System(Using SensorNetworkandWireless Communication)", International Journal of Interdisciplinary and Multidisciplinary Studies,2014,Vol 1,No.3,97-104.

[6]. Hossein Fotouhi, Aida Causevic, Kristina lundqvist, Mats bjorkman," Communication and Security in Health monitoring System – A Review", 2016 IEEE 40th Annual

computer software and application conference, DOI 10.1109/COMPSAC.2016.8.

[7]. M. U. Ahmed, M. Bj¨orkman, and A. Cauˇsevic, et al. An overview on the internet of things for health monitoring systems. In IoT Technologies for HealthCare, 2015.

[8]. [9] F. Samie and L. Bauer and C.-M. Hsieh et al. Online binding of applications to multiple clock domains in shared fpgabased systems. InDATE, pp. 25–30, 2015.

[9]. C. Perera and A. Zaslavsky and P. Christen et al. Context aware computing for the Internet of Things: A survey. IEEE Communications Surveys & Tutorials, 16(1):414–454, 2014.

[10]. Farzad Samie, Lars Bauer, Jörg Henkel, "IoT Technologies forEmbedded Computing: A Survey", ESWEEK'16, October 2-7 2016, Pittsburgh, PA, USA.

[11]. V. K. Chippa and S. T. Chakradhar and K. Roy, "Analysis and characterization of inherent application resilience for approximate computing", in DAC, 2013.

[12]. S. Qaisar, R. M. Bilal, and W. Iqbal, "Compressive sensing: From theory to applications, a survey", Journal of Communications and Networks, pp. 443–456, 2013.